Inkaba®

Rubber Technology & Manufacture

FENDERS CATALOGUE

Inkaba®

Rubber Technology & Manufacture

Providing excellent quality and service

FENDERS CATALOGUE

CONTENT

Our History	1.
Tester	2.
Laboratory	3.
Machine	4.
Type V, Anchor&Dyna Bolt	5.
Cone Fenders	6.
Type DD-SD	7.
Tug Boat	8.
Type Bibir Dermaga	9.
Cell Fenders	10.
Cylindricall Fenders	11.
Rotary Fenders	12.
Pi Fenders	13.
Pneumatic Fenders	14.

Produced by

PT. AGRONESIA

Our History

Period 1933-1979

As seen in its history, the estabilishment of **Industrial Government Company of** "*Inkaba*" **Unit** had experienced some periods as below:

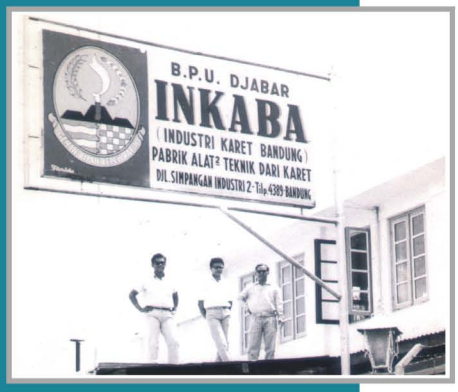

This Rubber Factory is built by Dutch Government with the name of **N.V. FATERU (Fabriek Technische Rubberwaren)** in 1933, using some very relatively simple equipments. When Japanesse arrived in Indonesia and Power Struggled from Dutch Government, this Company was named **" Priangan Gomoe Kogjo "**, and **they** gave top priority to the production of war materials.

According to the act no. 86 in 1958 and State Gazette no. 1962 in 1958 about nationalization, Dutch Companies in Indonesia, as the realization was regulated by Government Regulation No. 33 in 1959 and State Gazette no. 53 in 1959, had to be taken over by Indonesia Government.

Period 1999-Now

This Factory was handed over to West Java Government and the status of this Company was changed to be Government Company with the name of **Rubber and Chemical Government Company (Perusahaan Daerah Karet dan Kimia (PD. KARKIM)**, which has 3 (three) Units, as follows:

1. Unit 1 **PIKAN**, on Jakarta Street, No.22 Bandung
2. Unit 2 **INKABA**, on Simpangan Industri Street No. 2 Bandung
3. Unit 3 **KRIDA YUDHA**, on Jatinegara Street No.35

In1999, Based on Government Regulation no. 1 in 1999 on 26th January 1999, about merger of West Java Government Company, 10 (ten) of West Java Government Companies, 3 (three) of them were merged according to its units.

Industri Unit Inkaba (Industrial Government Company of Inkaba Unit) based on Government Regulation no 3 in 1999 about Industrial Government Company of WestJava Province, which in its expand not only work in Rubber Industry, but also in food and textile industries, and other related industries, other units are so. Particularly for Rubber Industry, the "*Inkaba*" trade mark is still used.

Company of West Java Province has chance became Limited Company (Co.Ltd) according to the Goverment regulation no. 4 on 2002 about law form of West Java province. Company became Limited Company(Co. Ltd), on 12th April 2002 and regulated in collection of West Java Province decrees in 2002 No. 8th series D. Based on Poppy Kuntari Sutresna , SH, M.Hum Notary Deed , in Bandung on 17th June 2002 No.8 had build as Limited Company in the name of **Agronesia, Co.Ltd** "*Inkaba*".

Tester

FENDER DEFLECTION TESTER

"*Inkaba*" has participated actively in making efficient use of internal affairs production through engineering and planning in order to subtitute the import product of Rubber engineering tools. In its expand, it is supported by some research institution through research cooperation in order to increase the quality product or to subtitute the import product.

FENDER CELL

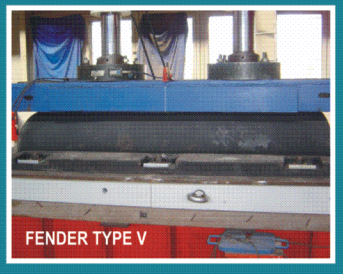
FENDER TYPE V

SNI 06-3568-1994

Some of "*Inkaba*" Commodities have been tested in research institution such as Balai Penelitian Teknologi Karet (BPTK) Bogor (Bogor Research institution of Rubber Technology), Laboratorium Struktur dan Bahan Jurusan Teknik Sipil, Structure and Material Laboratory of Civil Engineering Departement, FTSP ITB Bandung, Balai Penelitian Karet, Kulit dan Plastik, Yogya (Yogya Research Institution of Rubber, Leather and Plastic, Pusat Penelitian Pengembangan Pemukiman (Centre of Settlement Research and Development of Public Works Departement as well as Pusat Penelitian dan Pengembangan Jalan Departemen Pekerjaan Umum (Center of Road Research and Development of Public Works Departement..

Laboratory

RHEOMETER

MOONEY VISCO METER

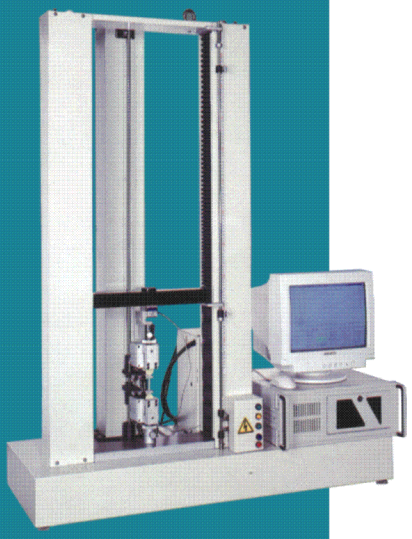

TENSILE STRENGTH TESTER

To increase more quality and services to the costumer, since january 1998, Certificate of ISO 9002 Quality System had been granded as the realization of the commitment of the company to quality guarantee.

ISO 9001
YOQA
LSSM-005-IDN
YQ005055

"*Inkaba*" in the last few years have tried to complete its testing laboratory with some few testing engines to get the expectable standard of quality, and continously always tries to increase the quality of human resources to be able to create / produce the marketable products.

Laboratory of " *Inkaba*" Research and Development has now been completed by some few tester equipments/tools, such as :

1. Mooney Visco Meter
2. Rheometer
3. Tensile Strength Tester
4. Aging Tester
5. Abrassion Tester
6. Ozone Tester
7. Hardness Tester
8. Oil Resistant Tester

"*Inkaba*" is able to produce some kinds of Rubber engineering commodities which are suitable with specification of needed either the design or phisically characteristic which require as follows :

~ Heat resistant
~ Abrassion resistant
~ Pressure resistant
~ Oil resistant
~ Chemical resistant, And so on.

Rubber engineering commodity of "*Inkaba*" production which is in accordance with the technological development of production process, always pays attention to some aspect of production, such as :

~ Material Aspect
~ Physical Aspect
~ Chemical Aspect
~ MechanicalAspect
~ Engineering and Planning Aspect

Machine

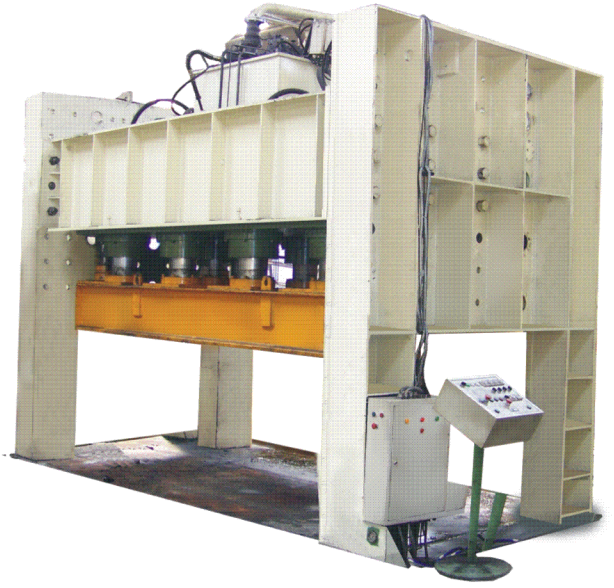

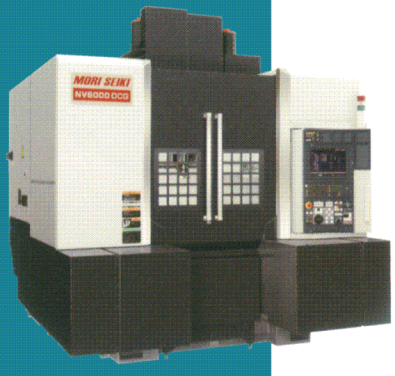

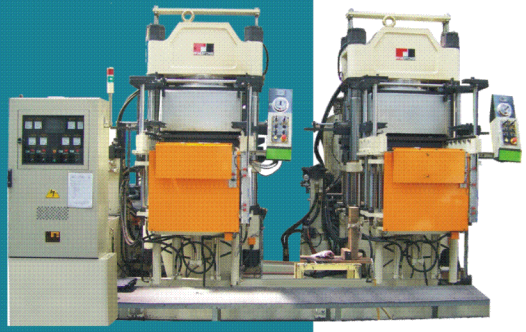

In the process of the production "*Inkaba*" today has been supported by some of production structures, such as :

1. Internal Mixer
2. Open Mill Mixing
3. Hose Machine
4. Calender Machine
5. Milling Machine
6. Compression Moulding
7. Steam Vulcanization Vessels
8. Injection Mould Machine
9. CNC Machine
10. EDM CNC Machine
11. Extruder Sheet Machine

Type V

Type V

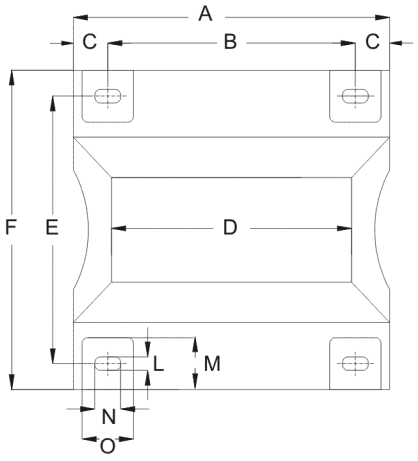

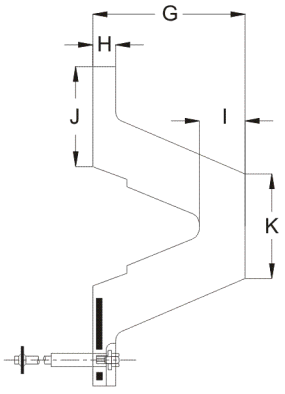

Size & Performance

DIMENSION

	A	B	C	D	E	F	G	H	I	J	K	L	M	N	O
V 150	1.075	855	110	1.000	240	300	150	23	45	96	98	25	55	50	95
	1.575	675	112,5	1.500	240	300	150	23	45	96	98	25	55	50	95
	2.075	620	107,5	2.000	240	300	150	23	45	96	98	25	55	50	95
	2.575	785	110	2.500	240	300	150	23	45	96	98	25	55	50	95
	3.075	715	107,5	3.000	240	300	150	23	45	96	98	25	55	50	95
	3.575	671	110	3.500	240	300	150	23	45	96	98	25	55	50	95
V 200	1.100	860	120	1.000	320	400	200	30	60	128	131	29	75	58	105
	1.600	680	120	1.500	320	400	200	30	60	128	131	29	75	58	105
	2.100	620	120	2.000	320	400	200	30	60	128	131	29	75	58	105
	2.600	785	122,5	2.500	320	400	200	30	60	128	131	29	75	58	105
	3.100	715	120	3.000	320	400	200	30	60	128	131	29	75	58	105
	3.600	672	120	3.500	320	400	200	30	60	128	131	29	75	58	105
V 250	1.125	865	130	1.000	410	500	250	37,5	75	160	164	32	90	64	125
	1.625	680	132,5	1.500	410	500	250	37,5	75	160	164	32	90	64	125
	2.125	620	132,5	2.000	410	500	250	37,5	75	160	164	32	90	64	125
	2.625	790	127,5	2.500	410	500	250	37,5	75	160	164	32	90	64	125
	3.125	715	132,5	3.000	410	500	250	37,5	75	160	164	32	90	64	125
V 300	1.150	870	140	1.000	490	600	300	45	90	192	197	35	105	70	140
	1.650	685	140	1.500	490	600	300	45	90	192	197	35	105	70	140
	2.150	625	137,5	2.000	490	600	300	45	90	192	197	35	105	70	140
	2.650	790	140	2.500	490	600	300	45	90	192	197	35	105	70	140
	3.150	715	145	3.000	490	600	300	45	90	192	197	35	105	70	140
V 400	1.200	900	150	1.000	670	800	400	60	120	256	262	41	120	82	165
	1.700	700	150	1.500	670	800	400	60	120	256	262	41	120	82	165
	2.200	635	147,5	2.000	670	800	400	60	120	256	262	41	120	82	165
	2.700	800	150	2.500	670	800	400	60	120	256	262	41	120	82	165
	3.200	725	150	3.000	670	800	400	60	120	256	262	41	120	82	165
V 500	1.250	930	160	1.000	840	1.000	500	75	150	320	328	47	140	94	180
	1.750	715	160	1.500	840	1.000	500	75	150	320	328	47	140	94	180
	2.250	645	157,5	2.000	840	1.000	500	75	150	320	328	47	140	94	180
	2.750	810	160	2.500	840	1.000	500	75	150	320	328	47	140	94	180

All dimension in millimeters

Type V

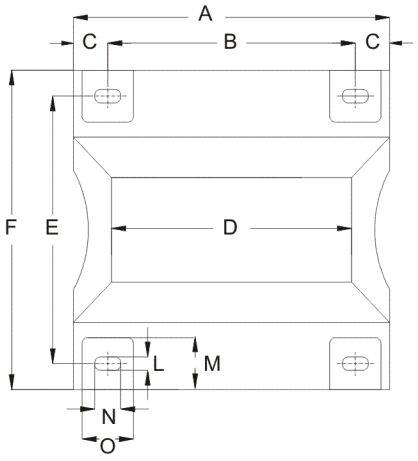

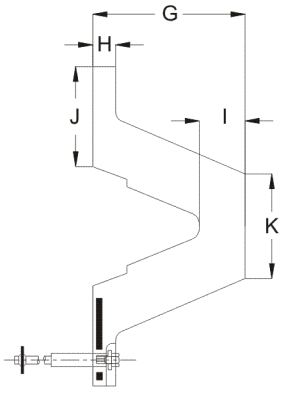

Size & Performance

DIMENSION

	A	B	C	D	E	F	G	H	I	J	K	L	M	N	O
V 600	1.300	960	170	1.000	1.010	1.200	600	90	180	384	393	50	160	100	195
	1.800	730	170	1.500	1.010	1.200	600	90	180	384	393	50	160	100	195
	2.300	655	167,5	2.000	1.010	1.200	600	90	180	384	393	50	160	100	195
	2.800	820	170	2.500	1.010	1.200	600	90	180	384	393	50	160	100	195
	3.300	740	170	3.000	1.010	1.200	600	90	180	384	393	50	160	100	195
V 800	1.400	1.040	180	1.000	1.340	1.600	800	120	240	501	524	68	260	136	270
	1.900	770	180	1.500	1.340	1.600	800	120	240	501	524	68	260	136	270
	2.400	680	180	2.000	1.340	1.600	800	120	240	501	524	68	260	136	270
	2.900	845	182,5	2.500	1.340	1.600	800	120	240	501	524	68	260	136	270
	3.400	760	180	3.000	1.340	1.600	800	120	240	501	524	68	260	136	270
V 1000	1.500	1.100	200	1.000	1.680	2.000	1.000	150	300	626	655	68	300	136	290
	2.000	800	200	1.500	1.680	2.000	1.000	150	300	626	655	68	300	136	290
	2.500	700	200	2.000	1.680	2.000	1.000	150	300	626	655	68	300	136	290
	3.000	865	202,5	2.500	1.680	2.000	1.000	150	300	626	655	68	300	136	290
	3.500	775	200	3.000	1.680	2.000	1.000	150	300	626	655	68	300	136	290
	4.900	900	200	3.500	1.680	2.000	1.000	150	300	626	655	68	300	136	290

All dimension in millimeters

Type V

Reaction Forced & Energy Absorption

RF=Reaction Force (Ton) E/A=Energy Absorption (Ton-m) Tolerance 10%

Type Fender		V 150							
		R1				R2			
Defleksi		45%		50%		45%		50%	
H (mm)	L (m)	R/F (Ton)	E/A (Ton)-M	R/F (Ton)	E/A (Ton)-M	R/F (Ton)	E/A (Ton)-M	R/F (Ton)	E/A (Ton)-M
150	1.0	14,19	0,66	19,14	0,88	6,16	0,33	8,36	0,33
	1,5	21,34	0,99	28,71	1,32	9.24	0,55	12,54	0,55
	2.0	28,38	1,32	38,28	1,76	12.32	0,66	16,72	0,66
	2,5	35,53	1,65	47,85	2,2	15.4	0,88	20,9	0,88
	3,0	42,57	1,98	57,42	2.64	18,48	0,99	25,08	0,99
	3,5	49,72	2,31	66,99	3.08	21,56	1,21	29,26	1,21

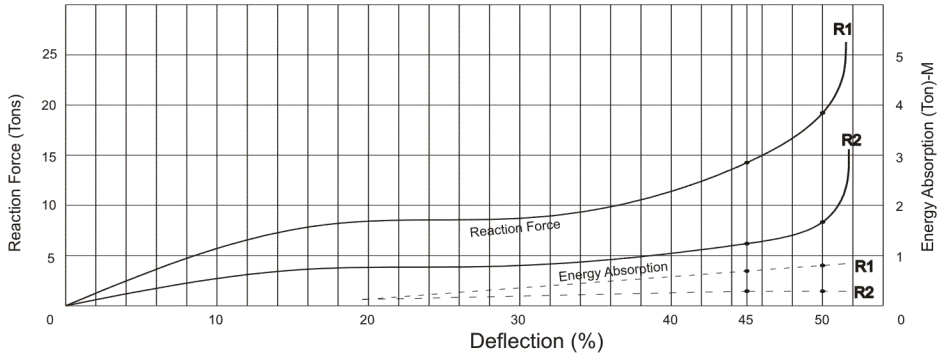

Type Fender		V 200							
		R1				R2			
Defleksi		45%		50%		45%		50%	
H (mm)	L (m)	R/F (Ton)	E/A (Ton)-M	R/F (Ton)	E/A (Ton)-M	R/F (Ton)	E/A (Ton)-M	R/F (Ton)	E/A (Ton)-M
200	1.0	19,03	1,32	25,74	1,54	8,25	0,55	11,11	0,66
	1,5	28,6	1,98	38,61	2,31	12,43	0,88	16,72	0,99
	2.0	38,06	2,64	51,48	3,08	16,50	1,10	22,22	1,32
	2,5	47,63	3,3	64,35	3,85	20,68	1,43	27,8	1,65
	3,0	57,09	3,96	77,22	4,62	24,75	1,65	33,33	1,98
	3,5	66,66	4,62	90,09	5,39	28,93	1,98	38,94	2,31

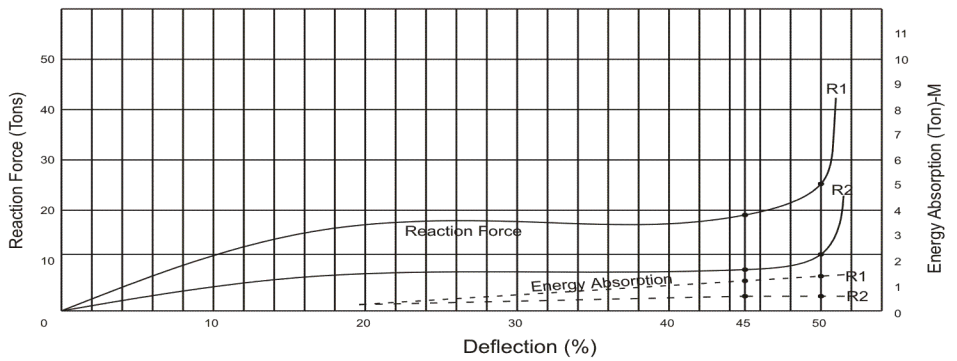

Type V

Reaction Forced & Energy Absorption

RF=Reaction Force (Ton) E/A=Energy Absorption (Ton-m) Tolerance 10%

Type Fender		V 250							
		R1				R2			
Defleksi		45%		50%		45%		50%	
H (mm)	L (m)	R/F (Ton)	E/A (Ton)-M	R/F (Ton)	E/A (Ton)-M	R/F (Ton)	E/A (Ton)-M	R/F (Ton)	E/A (Ton)-M
250	1.0	23,7	2	31,9	2,3	10,3	0,9	14	1
	1,5	35,5	3	47,9	3,5	15,50	1,30	21,00	1,50
	2.0	47,3	4	63,8	4,6	20,70	1,80	27,90	2,00
	2,5	59,2	5	79,8	5,8	25,90	2,20	35,0	2,50
	3,0	71	5,9	95,7	6,9	31,00	2,60	41,90	3,00

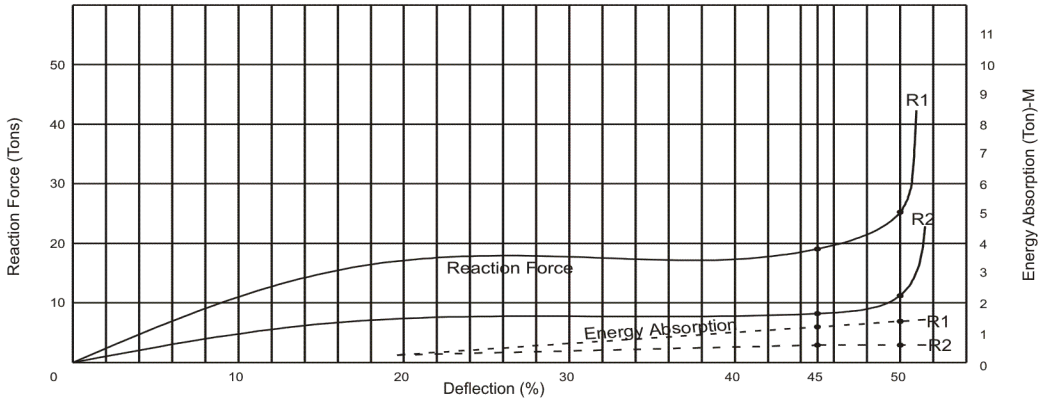

Type Fender		V 300							
		R1				R2			
Defleksi		45%		50%		45%		50%	
H (mm)	L (m)	R/F (Ton)	E/A (Ton)-M	R/F (Ton)	E/A (Ton)-M	R/F (Ton)	E/A (Ton)-M	R/F (Ton)	E/A (Ton)-M
300	1.0	28,4	2,9	38,3	3,3	12,4	1,2	16,8	1,4
	1,5	42,6	4,3	57,4	5	18,70	1,90	25,30	2,20
	2.0	56,8	5,7	76,6	6,6	24,90	2,40	33,70	2,90
	2,5	71	7,2	95,7	8,3	31,10	3,10	42,1	3,60
	3,0	85,1	8,6	114,8	9,9	37,30	3,60	50,50	4,30

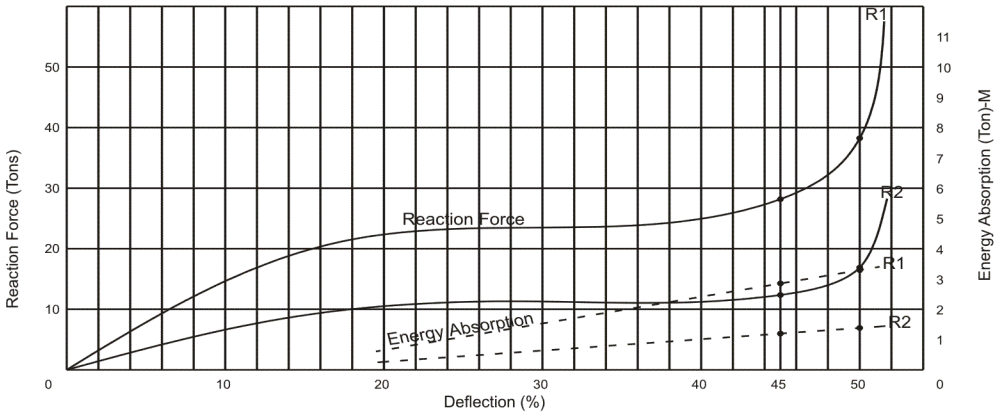

Type V

Reaction Forced & Energy Absorption

RF=Reaction Force (Ton) E/A=Energy Absorption (Ton-m) Tolerance 10%

Type Fender		V 400							
		R1				R2			
Defleksi		45%		50%		45%		50%	
H (mm)	L (m)	R/F (Ton)	E/A (Ton)-M	R/F (Ton)	E/A (Ton)-M	R/F (Ton)	E/A (Ton)-M	R/F (Ton)	E/A (Ton)-M
400	1.0	37,8	5,1	51.0	5,9	16,5	2,2	22,3	2,6
	1,5	56,8	7,6	76,6	8,9	24,80	3,30	33,60	4.0
	2.0	75,7	10,1	102,1	11,9	33.0	4,40	44,70	5,30
	2,5	94,6	12,7	127,6	14,9	41,30	5,50	55,9	6,60
	3,0	113,5	15,2	153,1	17,8	49,50	6,60	67,00	7,90

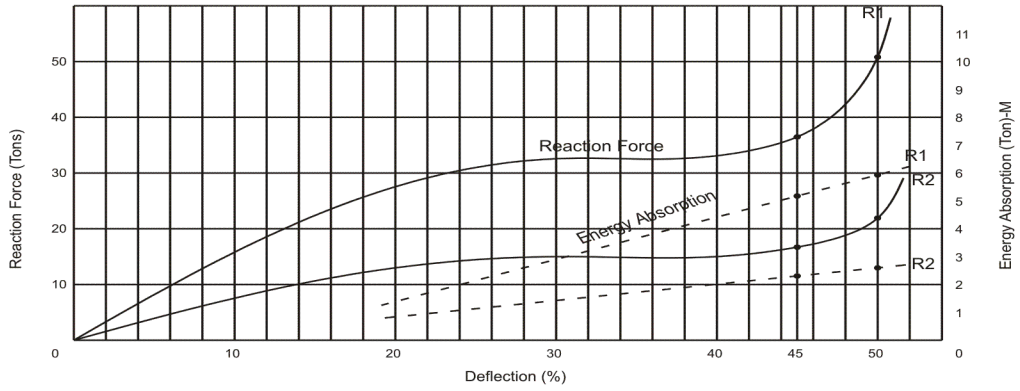

Type Fender		V 500							
		R1				R2			
Defleksi		45%		50%		45%		50%	
H (mm)	L (m)	R/F (Ton)	E/A (Ton)-M	R/F (Ton)	E/A (Ton)-M	R/F (Ton)	E/A (Ton)-M	R/F (Ton)	E/A (Ton)-M
500	1.0	47,3	7,9	63,9	9,2	20,6	3,5	27,7	4,1
	1,5	71	11,9	95,9	13,9	30,90	5,30	41,60	6,20
	2.0	94,6	15,8	127,8	18,5	41,10	7,00	55,40	8,10
	2,5	118,3	19,8	159,8	23,1	51,50	8,80	69,3	10,20
	3,0	141,9	23,8	191,7	27,7	61,70	10,60	83,20	12,20

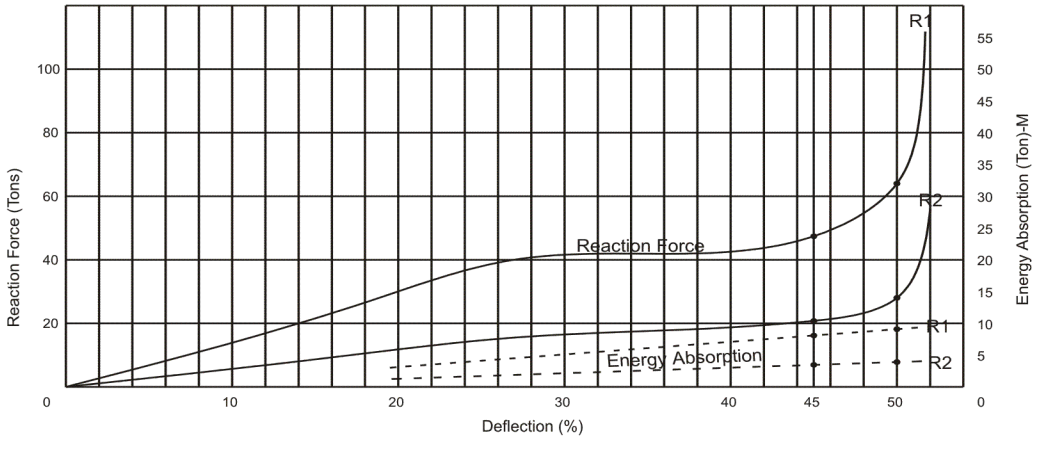

Type V

Reaction Forced & Energy Absorption

RF=Reaction Force (Ton) E/A=Energy Absorption (Ton-m) Tolerance 10%

Type Fender		V 600							
		R1				R2			
Defleksi		45%		50%		45%		50%	
H (mm)	L (m)	R/F (Ton)	E/A (Ton)-M	R/F (Ton)	E/A (Ton)-M	R/F (Ton)	E/A (Ton)-M	R/F (Ton)	E/A (Ton)-M
600	1.0	56,7	11,2	76,5	13,1	24,8	5,1	33,4	5,8
	1,5	85	16,8	114,7	19,7	37,20	7,60	50,20	8,80
	2.0	113,3	22,4	152,9	26,2	49,50	10,10	66,90	11,70
	2,5	141,7	28,1	191,2	32,8	61,90	12,70	83,6	14,60
	3,0	170	33,7	229,4	39,3	74,30	15,20	100,30	17,50

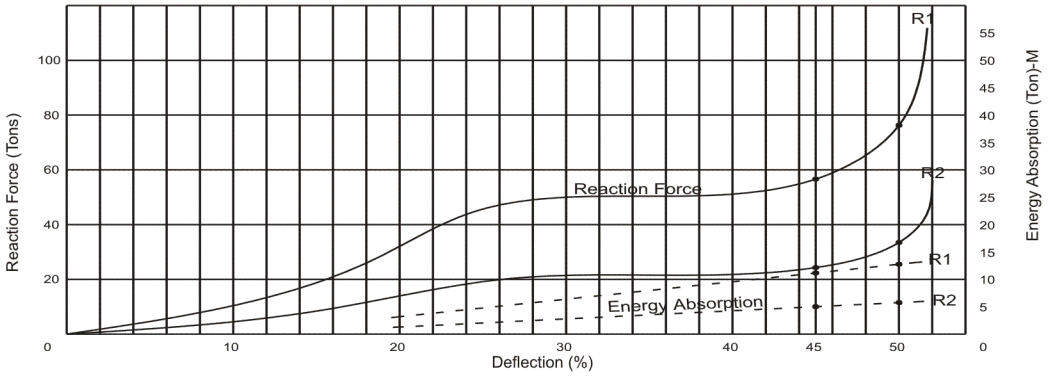

Type Fender		V 800							
		R1				R2			
Defleksi		45%		50%		45%		50%	
H (mm)	L (m)	R/F (Ton)	E/A (Ton)-M	R/F (Ton)	E/A (Ton)-M	R/F (Ton)	E/A (Ton)-M	R/F (Ton)	E/A (Ton)-M
800	1.0	75,7	20,1	102,2	23,5	33	8,9	44,6	10,5
	1,5	113,5	30,3	153,3	35,3	49,50	13,40	66,90	15,70
	2.0	151,5	40,3	204,4	47,1	66,00	17,80	89,10	20,90
	2,5	189,2	50,4	255,5	58,9	82,50	22,30	111,4	26,20
	3,0	227	60,4	306,6	70,6	99,00	26,70	133,70	31,40

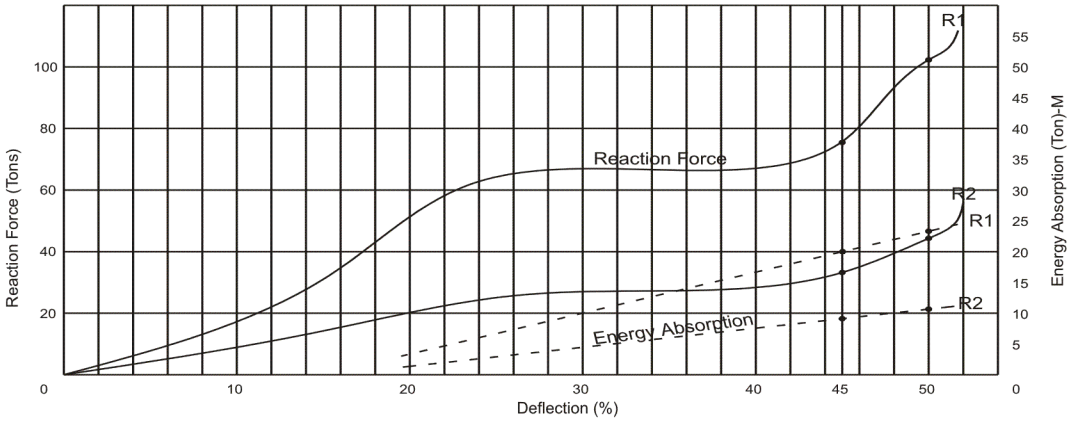

Type V

Reaction Forced & Energy Absorption

RF=Reaction Force (Ton) E/A=Energy Absorption (Ton-m) Tolerance 10%

Type Fender		V 1000							
		R1				R2			
Defleksi		45%		50%		45%		50%	
H (mm)	L (m)	R/F (Ton)	E/A (Ton)-M	R/F (Ton)	E/A (Ton)-M	R/F (Ton)	E/A (Ton)-M	R/F (Ton)	E/A (Ton)-M
1000	1.0	94,6	31,46	127,71	36,85	41,14	15,07	56,65	17,6
	1,5	141,9	47,19	191,62	55,33	61,71	22,66	83,38	26,40
	2.0	189,2	62,92	255,42	73,7	82,28	30,14	111,10	35,20
	2,5	236,5	78,65	319,33	92,18	102,85	37,73	138,9	44,00
	3,0	283,8	94,38	383,13	110,55	123,42	45,21	166,65	52,80
	3,5	331,1	110,11	447,04	129,03	143,99	52,80	194,48	61,60

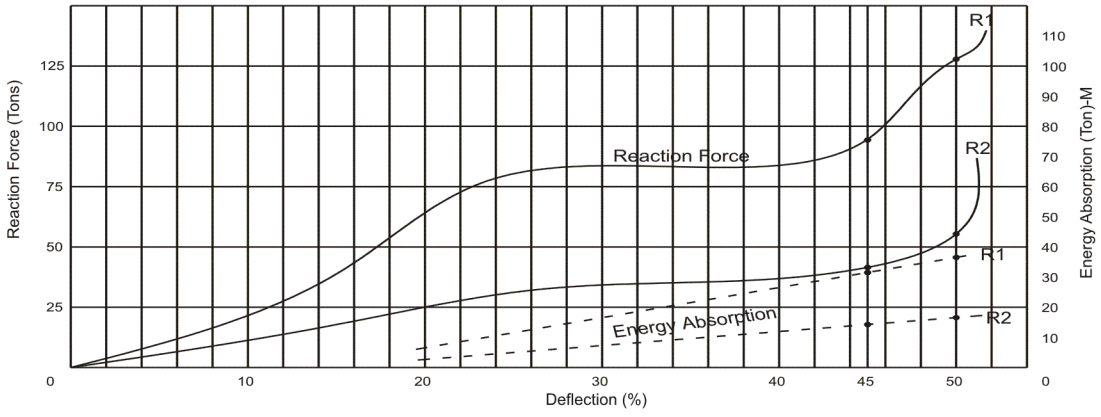

Anchorbolt

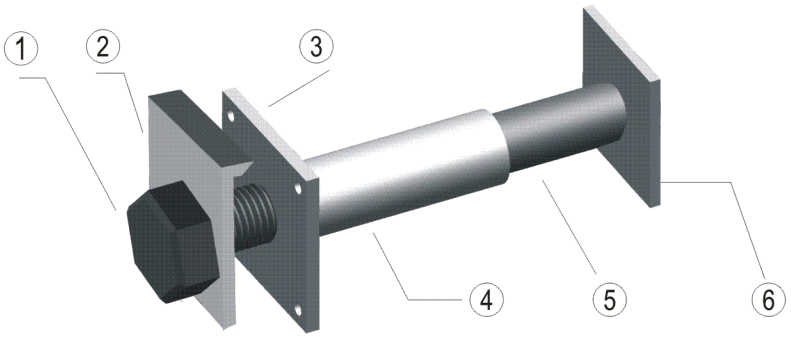

1 Bolt

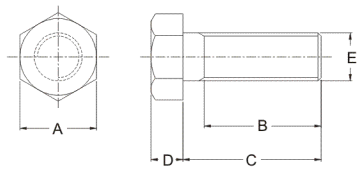

2 Washer

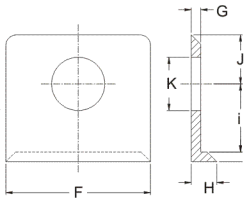

3 Flange

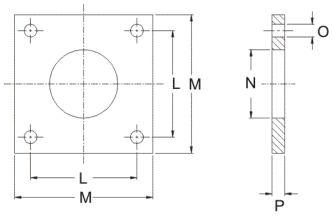

4 Sleeve

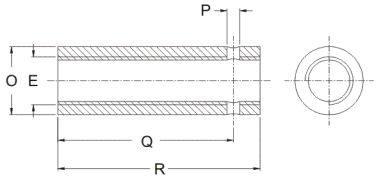

5 Anchor Bar

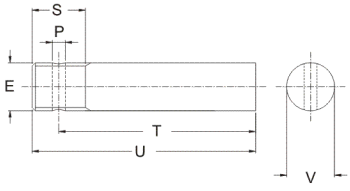

6 Anchor Plate

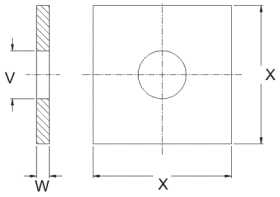

DIMENSION

	A	B	C	D	E	F	G	H	I	J	Ø.K	L	M	Ø.N	Ø.O	P	Q	R	S	T	U	V	W	X
V 150	35	55	65	15	W 7/8"	68	4,5	12	32	23	25	50	65	32	6	6	82,5	95	25	92,5	105	Ø22,5	6	65
V 200	41	55	70	18	W 1"	74	4,5	14	42	33	29	55	70	36	6	6	87,5	100	25	97,5	110	Ø25,5	6	70
V 250	46	60	75	20	W 11/8"	88	4,5	16	48	42	34	60	75	38	6	6	85	105	30	120,0	135	Ø29	9	75
V 300	50	70	85	22	W 11/4"	100	4,5	19	58	47	37	65	80	42	6	6	102,5	120	35	127,5	145	Ø32	9	80
V 400	58	75	95	27	W 11/2"	119	6	19	68	52	43	70	85	50	6	6	105	125	40	150,0	170	Ø38	9	85
V 500	67	90	110	32	W 13/4"	127	6	25	83	56	49	85	110	60	8	6	117,5	140	45	172,5	195	Ø44,5	12	110
V 600	71	90	110	34	W 17/8"	139	6	28	98	61	52	90	115	65	8	6	120	145	50	205,0	230	Ø48	12	115
V 800	95	125	150	45	W 21/2"	195	8	32	134	124	70	105	130	80	8	6	157,5	190	65	272,5	305	Ø63,5	16	130
V 1000	95	125	150	45	W 21/2"	215	8	36	164	134	70	105	130	80	8	6	157,5	190	65	272,5	305	Ø63,5	16	130

Dimension in mm (inch)

Dynabolt

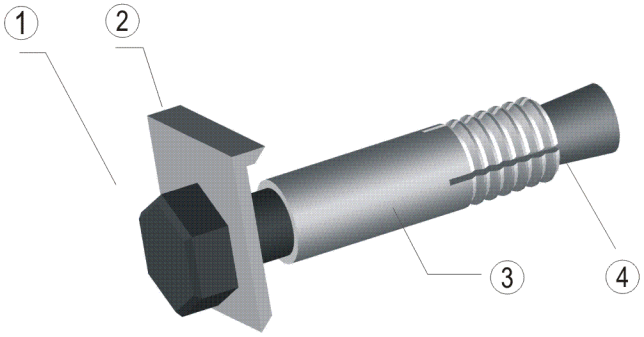

1 Bolt

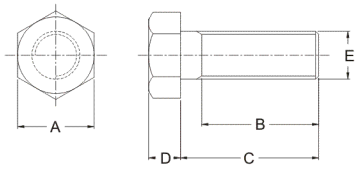

2 Washer

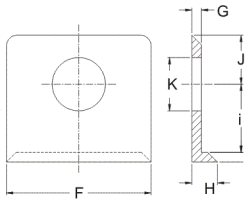

3 Sleeve

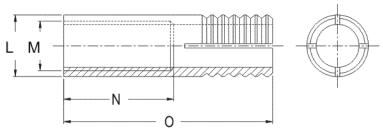

4 Taper Pin

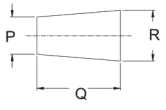

DIMENSION

	A	B	C	D	E	F	G	H	I	J	Ø.K	Ø.L	M	N	O	Ø.P	Q	Ø.R
V 150	35	55	65	15	W 7/8"	68	4,5	12	32	23	25	28	W 7/8"	50	95	17	38	23
V 200	41	55	65	18	W 1"	74	4,5	14	42	33	29	32	W 1"	55	110	20	40	26
V 250	46	60	75	20	W 11/8"	88	4,5	16	48	42	34	35	W 11/8"	70	125	23	42	30
V 300	50	70	85	22	W 11/4"	100	4,5	19	58	47	37	40	W 11/4"	80	140	26	45	33
V 400	58	85	105	27	W 11/2"	119	6	22	68	52	43	48	W 11/2"	95	185	32	48	40
V 500	67	100	125	32	W 13/4"	127	6	25	83	56	49	55	W 13/4"	110	200	37	52	46

Dimension in mm (inch)

Cone Fenders

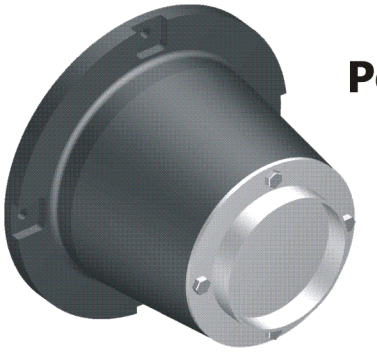

Size & Performance

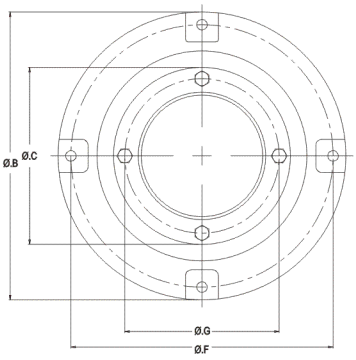

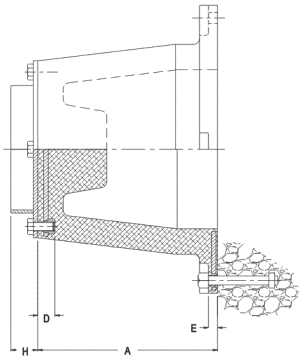

DIMENSION

FENDER	A	ØB	ØC	D	E	ØF	ØG	H	Weigh (Kg)
CF 300	300	500	295	27-37	15	440	255	45	31
CF 350	350	570	330	27-37	15	510	275	52	40
CF 400	400	650	390	30-40	20	585	340	60	74
CF 500	500	800	490	34-42	25	730	425	75	144
CF 550	550	880	540	32-42	25	790	470	82	195
CF 600	600	960	590	40-52	30	875	515	90	240
CF 700	700	1120	685	40-52	35	1020	600	105	395
CF 800	800	1280	785	40-52	35	1165	685	120	606
CF 900	900	1440	885	40-52	35	1313	770	135	841
CF 1000	1000	1600	980	50-65	35	1460	855	150	1120
CF 1050	1050	1680	1030	50-65	40	1530	900	157	1360
CF 1100	1100	1760	1080	50-65	40	1605	940	165	1545
CF 1200	1200	1920	1175	57-80	40	1750	1025	180	1970
CF 1300	1300	2080	1275	65-90	40	1900	1100	195	2455
CF 1400	1400	2240	1370	65-90	50	2040	1195	210	3105
CF 1600	1600	2560	1570	65-90	60	2335	1365	240	4645
CF 1800	1800	2880	1765	75-100	60	2625	1540	270	6618
CF 2000	2000	3200	1955	80-105	60	2920	1710	300	9560

All dimension in millimeters

Type DD-SD

Size & Performance

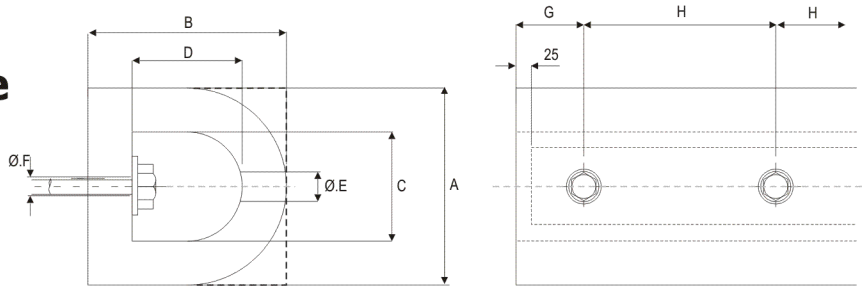

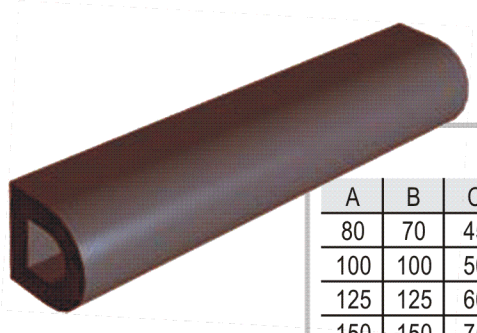

TYPE DD

A	B	C	D	ØE	ØF	G	H	Flat Bar	Bolt Size	Wt (kg/m)
80	70	45	30	30	15	90-130	200-300	35X5	M12	4,4
100	100	50	45	30	15	90-130	200-300	40X5	M12	8,1
125	125	60	60	40	20	110-150	250-350	50X6	M16	12,5
150	150	75	75	40	20	110-150	250-350	60X8	M16	17,5
200	150	100	80	50	25	130-180	300-400	80X10	M20	21,9
200	200	100	100	50	25	130-180	300-400	80X10	M20	31,2
250	200	125	100	60	30	140-200	350-450	90X12	M24	37,8
250	250	125	125	60	30	140-200	350-450	90X12	M24	48,7
300	300	150	150	60	30	140-200	350-450	110X12	M24	70,2
350	350	175	175	75	35	140-200	350-450	130X15	M30	95,5
380	380	190	190	75	35	140-200	350-450	140X15	M30	122,6
400	300	175	150	75	35	140-200	350-450	130X15	M30	93
400	400	200	200	75	35	140-200	350-450	150X15	M30	124,8
500	500	250	250	90	45	160-230	400-500	180X20	M36	195

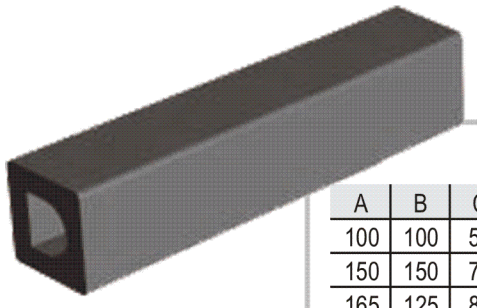

TYPE SD

A	B	C	D	ØE	ØF	G	H	Flat Bar	Bolt Size	Wt (kg/m)
100	100	50	45	30	15	90-130	200-300	40X5	M12	9,3
150	150	70	65	40	20	110-150	250-350	50X8	M16	21,5
165	125	80	60	40	20	110-150	250-350	60X8	M16	19,2
200	150	90	65	50	25	130-180	300-400	70X10	M20	29,1
200	200	90	95	50	25	130-180	300-400	70X10	M20	37,7
250	200	120	95	60	30	140-200	350-450	90X12	M24	46,8
250	250	120	120	60	30	140-200	350-450	90X12	M24	57,8
300	250	140	115	60	30	140-200	350-450	100X12	M24	71,1
300	300	125	135	60	30	140-200	350-450	100X12	M24	87,1
400	400	200	200	75	35	140-200	350-450	150X15	M30	144,8
500	500	250	250	90	45	160-230	400-500	180X20	M36	226,3

Tug Boat

Type W
Size & Performance

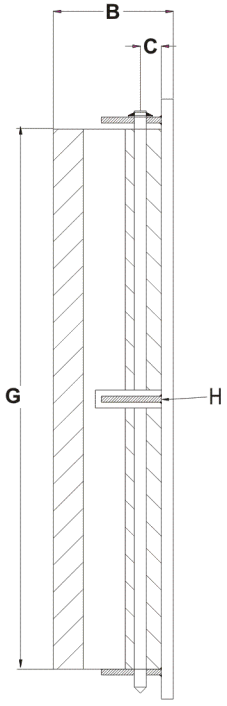

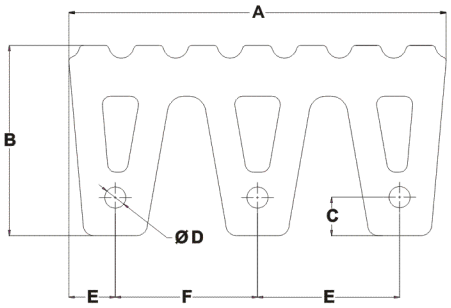

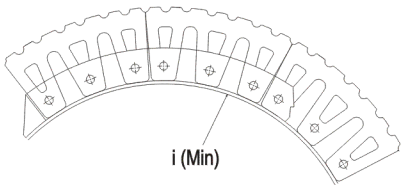

A (mm)	B (mm)	C (mm)	Ø.D (mm)	E (mm)	F (mm)	G (max) (mm)	H (mm)	I (mm)	Weight (kg)
400	200	40	23	50	150	2000	100 X 15	450	56
500	250	50	27	60	190	2000	125 X 20	550	89
600	300	60	33	70	230	2000	150 X 20	650	132

Tug Boat

Type W
Size & Performance

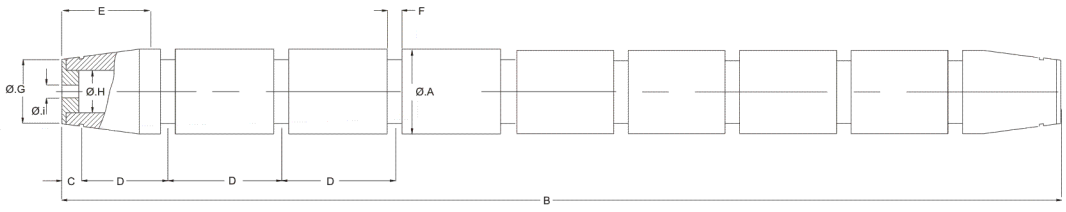

Ø.A	B	C	D	E	F	Ø.G	Ø.H	Ø.i
200	2000-13000	150	530	500	Variety Size	150	100	75
250	2000-13000	200	570	500	Variety Size	190	125	75
300	2000-13000	225	600	700	Variety Size	225	150	75
350	2000-13000	250	630	800	Variety Size	260	175	100
400	2000-13000	300	670	800	Variety Size	300	200	100
500	2000-13000	300	730	900	Variety Size	375	250	100
600	2000-13000	350	800	900	Variety Size	450	300	125
700	2000-13000	350	860	1000	Variety Size	525	350	125
800	2000-13000	350	930	1000	Variety Size	600	400	125
900	2000-13000	350	1000	1100	Variety Size	675	450	150
1000	2000-13000	350	1060	1200	Variety Size	750	500	150

All Dimension in Millimeter

Type Bibir Dermaga

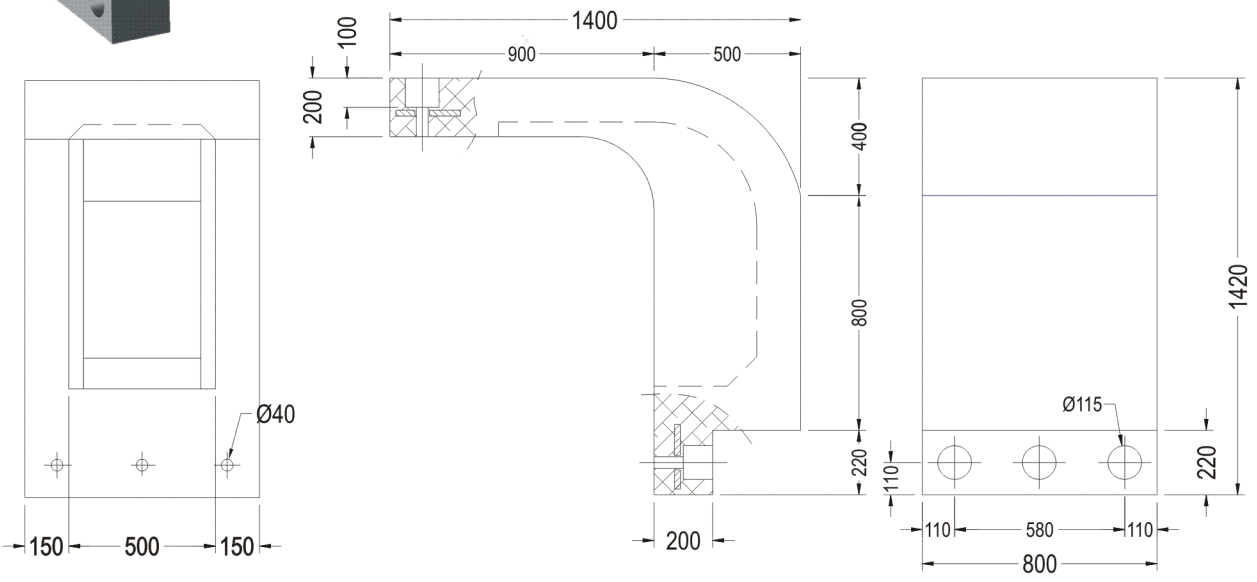

All dimension in millimeters

Cell Fenders

DIMENSION

	A	B	C	D	E
C 400	25	Ø550	Ø650	400	4 hole ~ Ø30
C 500	25	Ø550	Ø650	500	4 hole ~ Ø32
C 630	25	Ø700	Ø840	630	4 hole ~ Ø39
C 800	30	Ø900	Ø1050	800	6 hole ~ Ø40
C 1000	35	Ø1100	Ø1300	1.000	6 hole ~ Ø47
C 1150	37	Ø1300	Ø1500	1.150	6 hole ~ Ø50
C 1250	40	Ø1450	Ø1650	1.250	6 hole ~ Ø53
C 1700	50	Ø1900	Ø2100	1.700	8 hole ~ Ø66
C 2000	50	Ø2000	Ø2200	2.000	8 hole ~ Ø74
C 2500	70	Ø2700	Ø2950	2.500	10 hole ~ Ø74

Dimension in mm (inch)

Size & Performance

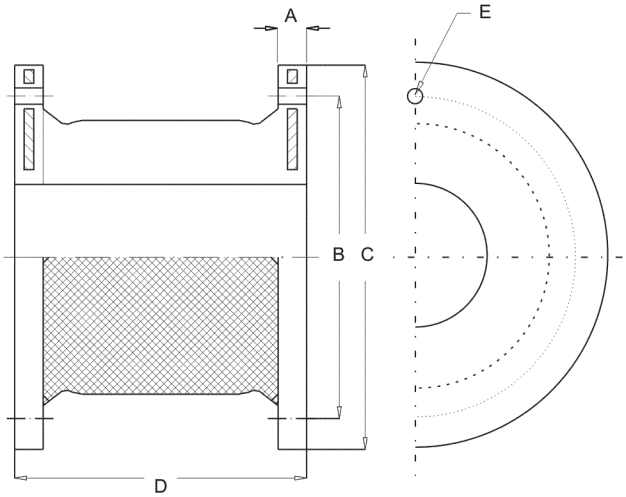

Cell Fenders

Reaction Forced & Energy Absorption

RF=Reaction Force (Ton) E/A=Energy Absorption (Ton-m) Tolerance 10%

C 400				
Rubber Grade	Rated Reaction Force (Tons)	Maximum Reaction Force (Tons)	Rated Energy Absorption (Ton-M)	Maximum Energy Absorption (Ton-M)
HC	11,1	12,9	1,8	2
SC	5,4	6,1	0,9	0,99

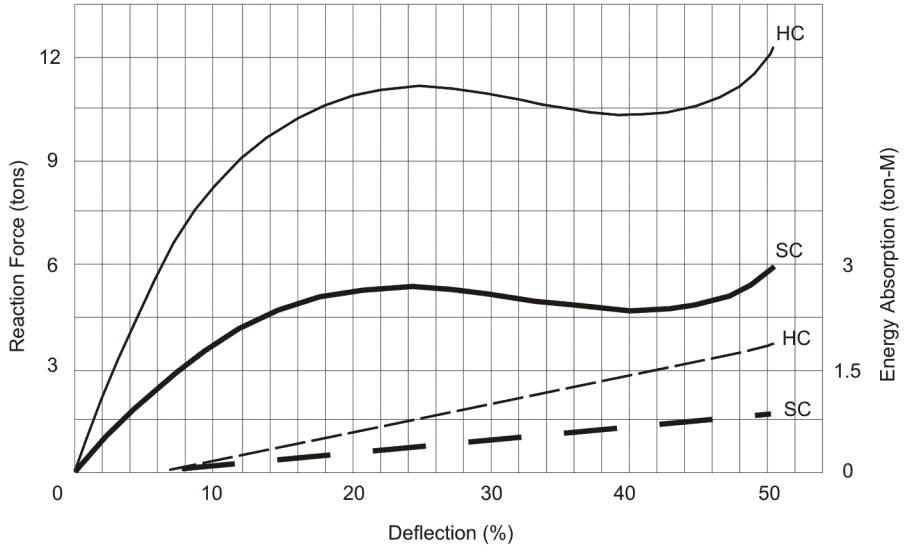

C 500				
Rubber Grade	Rated Reaction Force (Tons)	Maximum Reaction Force (Tons)	Rated Energy Absorption (Ton-M)	Maximum Energy Absorption (Ton-M)
HC	18,7	21,65	3,7	3,95
SC	8,9	10,2	1,65	1,9

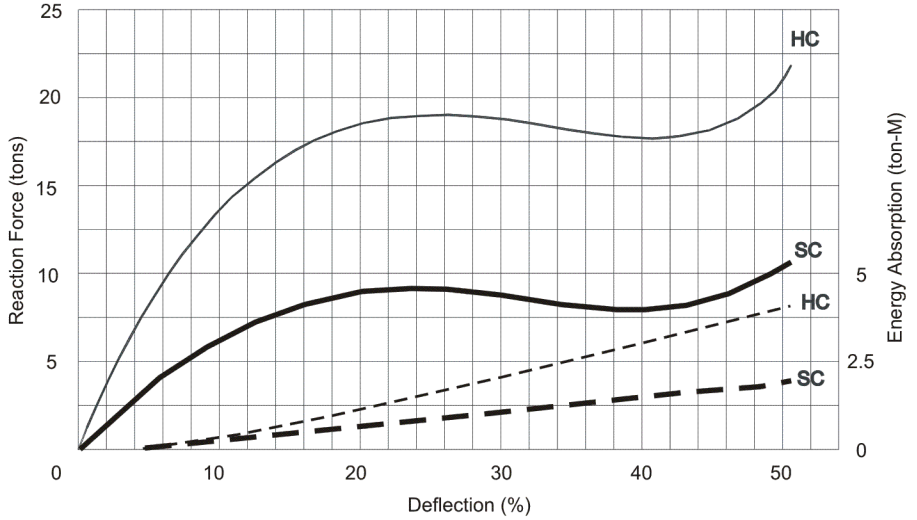

Cell Fenders

Reaction Forced & Energy Absorption

RF=Reaction Force (Ton) E/A=Energy Absorption (Ton-m) Tolerance 10%

C 630				
Rubber Grade	Rated Reaction Force (Tons)	Maximum Reaction Force (Tons)	Rated Energy Absorption (Ton-M)	Maximum Energy Absorption (Ton-M)
HC	29,8	31,7	8,3	8,8
SC	14,2	15	4	4,3

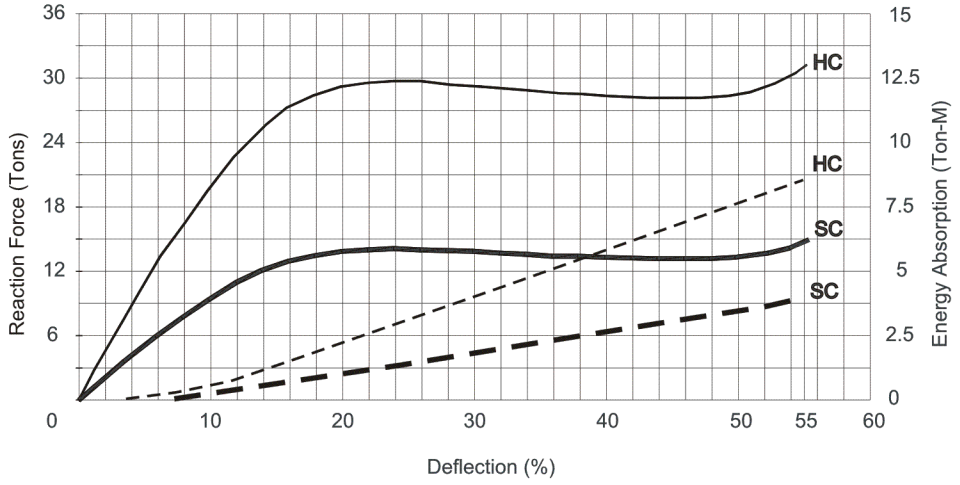

C 800				
Rubber Grade	Rated Reaction Force (Tons)	Maximum Reaction Force (Tons)	Rated Energy Absorption (Ton-M)	Maximum Energy Absorption (Ton-M)
HC	47,4	50,4	16,8	17,7
SC	21,6	23	7,8	8

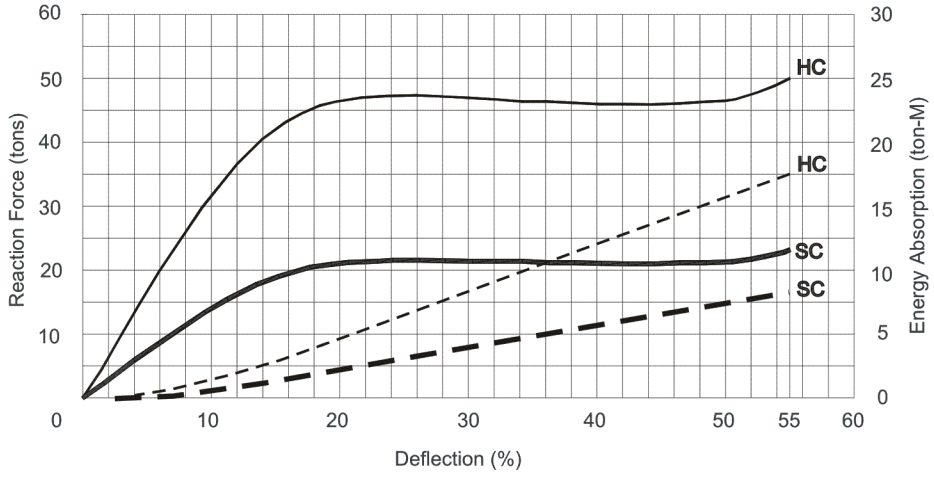

Cell Fenders

Reaction Forced & Energy Absorption

RF=Reaction Force (Ton) E/A=Energy Absorption (Ton-m) Tolerance 10%

C 1000				
Rubber Grade	Rated Reaction Force (Tons)	Maximum Reaction Force (Tons)	Rated Energy Absorption (Ton-M)	Maximum Energy Absorption (Ton-M)
HC	75,3	80,1	33,1	35,2
SC	35,7	38	15,7	16,7

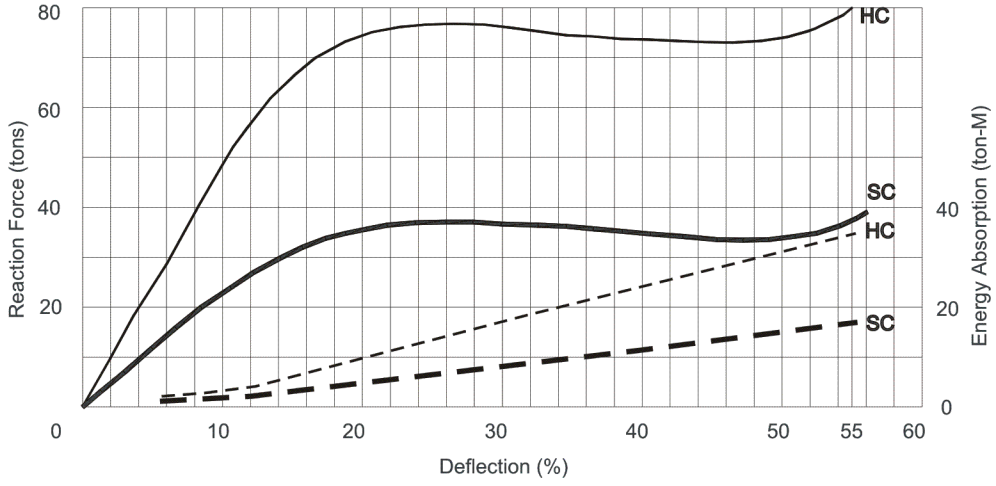

C 1150				
Rubber Grade	Rated Reaction Force (Tons)	Maximum Reaction Force (Tons)	Rated Energy Absorption (Ton-M)	Maximum Energy Absorption (Ton-M)
HC	100	106	50,3	53,2
SC	47,2	50,2	23,9	25,2

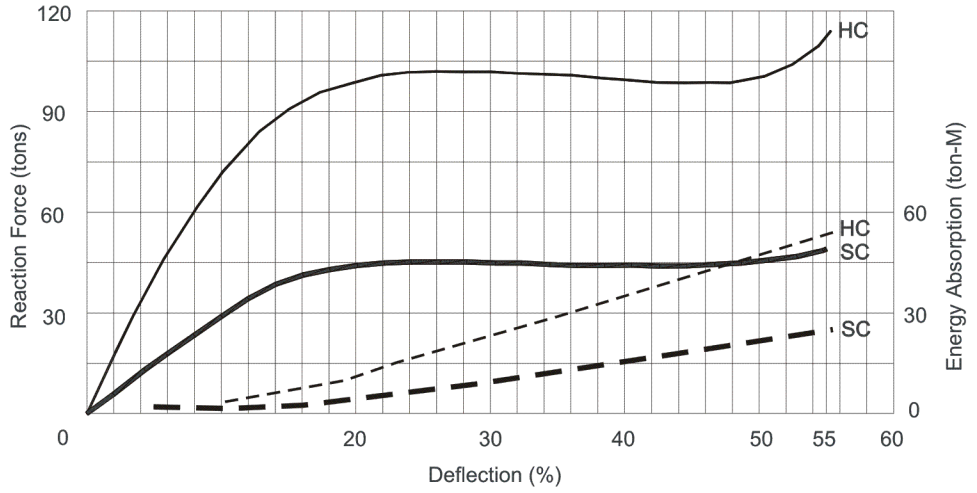

Cell Fenders

Reaction Forced & Energy Absorption

RF=Reaction Force (Ton) E/A=Energy Absorption (Ton-m) Tolerance 10%

C 1250				
Rubber Grade	Rated Reaction Force (Tons)	Maximum Reaction Force (Tons)	Rated Energy Absorption (Ton-M)	Maximum Energy Absorption (Ton-M)
HC	117,7	125	64,6	68,4
SC	55,7	59,2	30,6	32,3

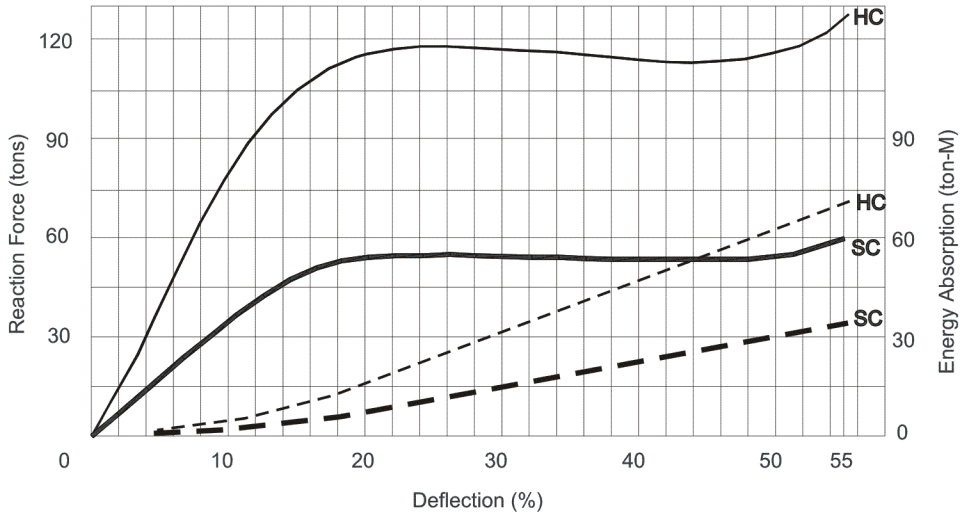

C 1700				
Rubber Grade	Rated Reaction Force (Tons)	Maximum Reaction Force (Tons)	Rated Energy Absorption (Ton-M)	Maximum Energy Absorption (Ton-M)
HC	217,2	231,2	162,4	172
SC	102,9	109,5	76,9	81,5

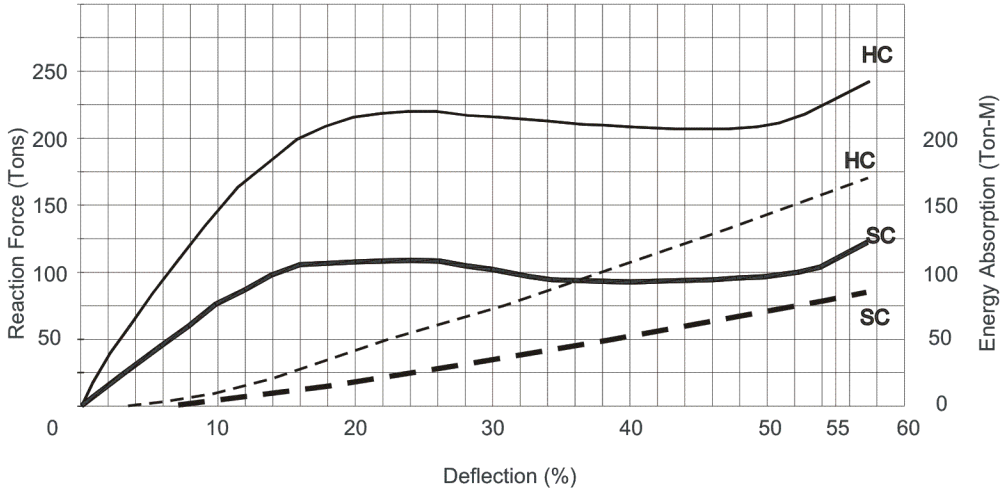

Cell Fenders

Reaction Forced & Energy Absorption

RF=Reaction Force (Ton) E/A=Energy Absorption (Ton-m) Tolerance 10%

C 2000				
Rubber Grade	Rated Reaction Force (Tons)	Maximum Reaction Force (Tons)	Rated Energy Absorption (Ton-M)	Maximum Energy Absorption (Ton-M)
HC	300	320,1	264,4	280
SC	142,7	151,5	125,2	132,6

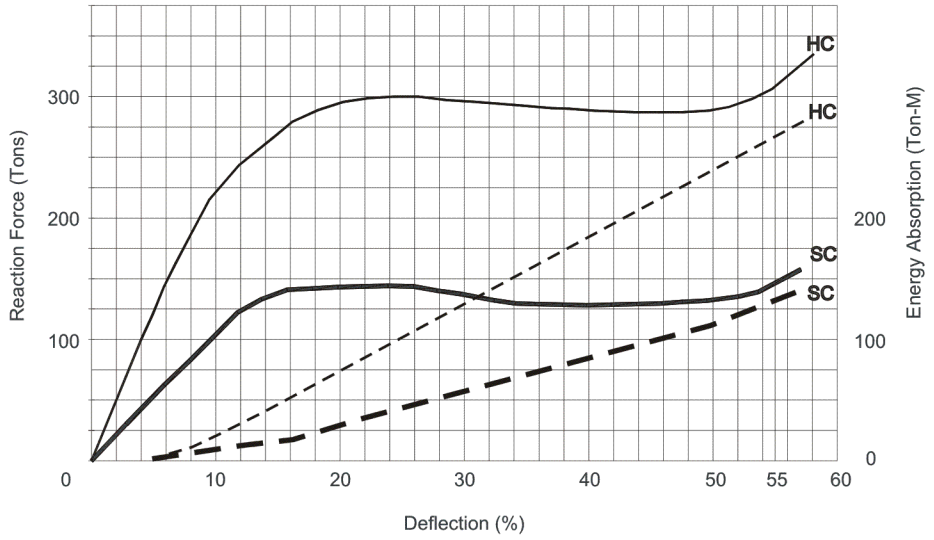

C 2500				
Rubber Grade	Rated Reaction Force (Tons)	Maximum Reaction Force (Tons)	Rated Energy Absorption (Ton-M)	Maximum Energy Absorption (Ton-M)
HC	522	555	573	606,8
SC	262,6	279,2	288,3	305,2

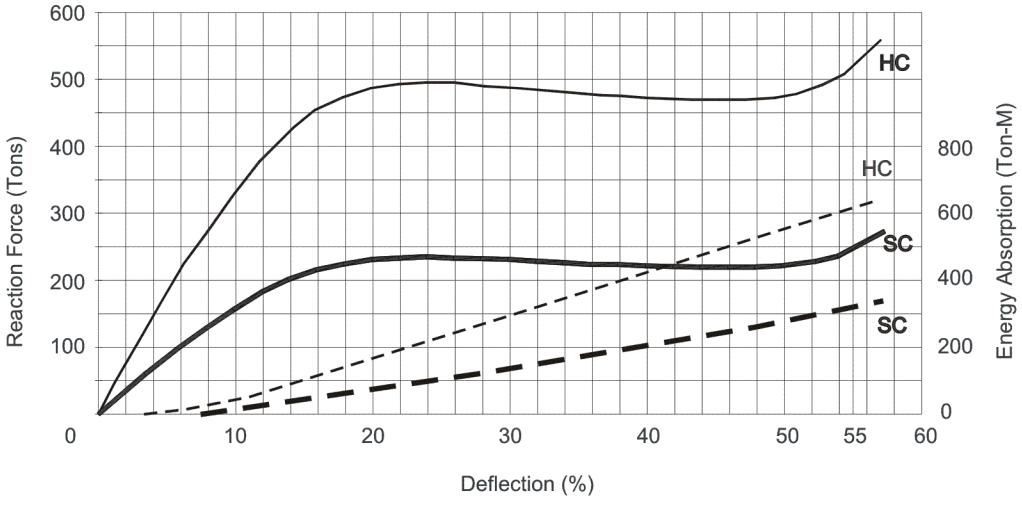

Cylindrical Fenders

Size & Performance

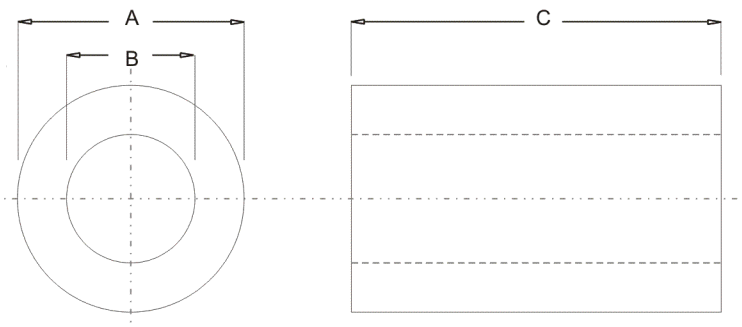

DIMENSION		
A	B	C Max Length
150	75	12.000
200	100	12.000
250	125	12.000
300	150	12.000
380	190	12.000
400	200	12.000
450	225	12.000
480	240	12.000
500	250	12.000
530	265	12.000
600	300	12.000
700	350	12.000
800	400	12.000
900	450	12.000
1000	500	12.000
1100	550	3.000
1200	600	3.000
1300	650	3.000
1400	700	3.000
1500	750	3.000
1600	800	3.000
1700	850	3.000
1800	900	3.000
1900	950	2.000

All dimensions in Milimetres

Cylindrical Fenders

Reaction Forced & Energy Absorption

RF=Reaction Force (Ton) E/A=Energy Absorption (Ton-m) Tolerance 10%

Ø 150 - Ø 300				
Deflection	45%		50%	
Performance / Size (mm)	R (Ton)	E (Ton-M)	R (Ton)	E (Ton-M)
Ø 150 x Ø 75	6,49	0,20	8,03	0,25
Ø 200 x Ø 100	8,69	0,37	10,67	0,47
Ø 250 x Ø 125	10,89	0,58	13,42	0,73
Ø 300 x Ø 150	13,09	0,85	16,06	1,07

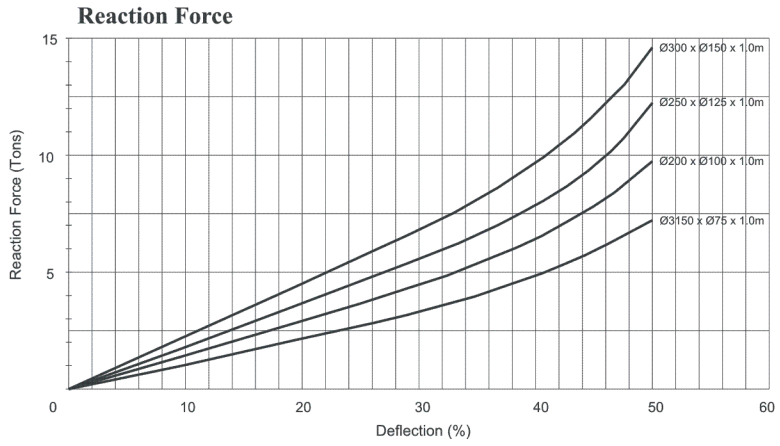

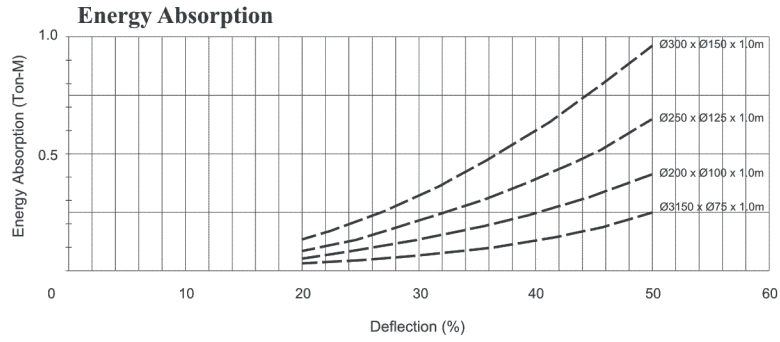

Cylindrical Fenders

Reaction Forced & Energy Absorption

RF=Reaction Force (Ton) E/A=Energy Absorption (Ton-m) Tolerance 10%

Ø 380 - Ø 500				
Deflection	45%		50%	
Performance / Size (mm)	R (Ton)	E (Ton-M)	R (Ton)	E (Ton-M)
Ø 380 x Ø 190	16,50	1,35	20,35	1,71
Ø 400 x Ø 200	17,38	1,51	21,45	1,89
Ø 450 x Ø 225	19,58	1,90	24,09	2,40
Ø 480 x Ø 240	21,01	2,15	25,85	2,75
Ø 500 x Ø 250	21,78	2,42	26,84	2,97

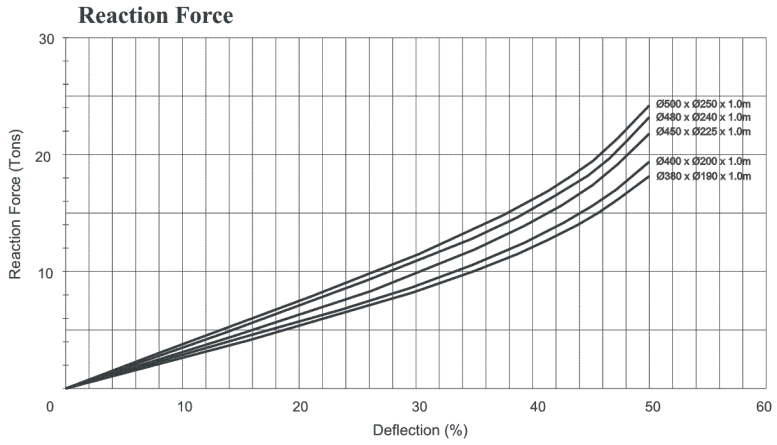

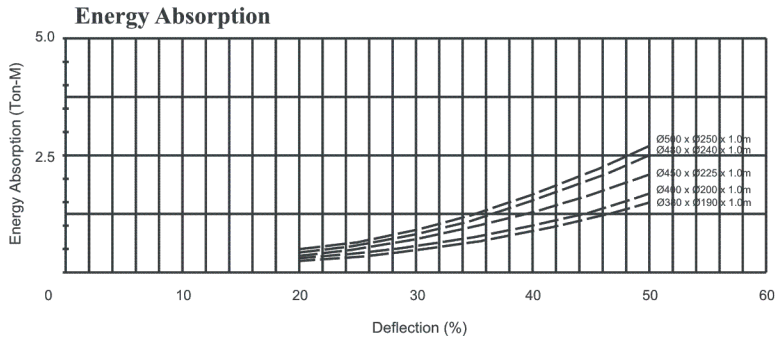

Cylindrical Fenders

Reaction Forced & Energy Absorption

RF=Reaction Force (Ton) E/A=Energy Absorption (Ton-m) Tolerance 10%

Ø 530 - Ø 800				
Deflection	45%		50%	
Performance / Size (mm)	R (Ton)	E (Ton-M)	R (Ton)	E (Ton-M)
Ø 530 x Ø 265	23,10	2,64	28,38	3,32
Ø 600 x Ø 300	26,18	3,40	32,12	4,27
Ø 700 x Ø 350	30,47	4,63	37,51	5,82
Ø 800 x Ø 400	34,87	6,05	42,90	7,60

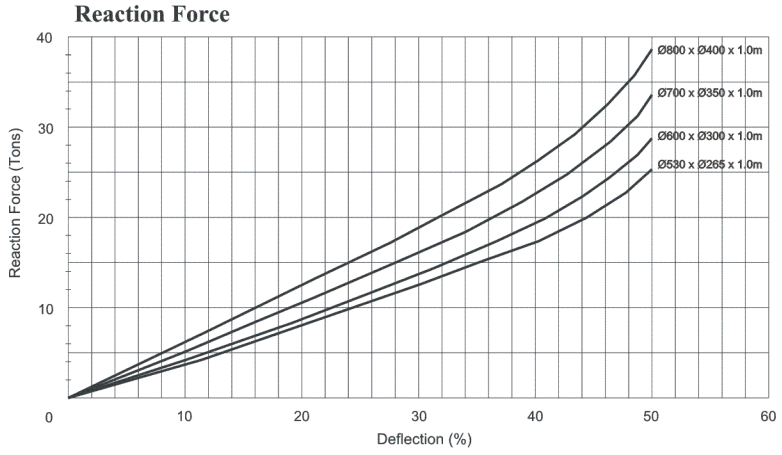

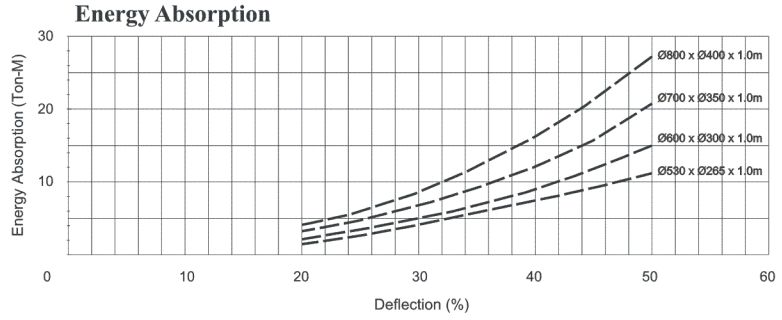

Cylindrical Fenders

Reaction Forced & Energy Absorption

RF=Reaction Force (Ton) E/A=Energy Absorption (Ton-m) Tolerance 10%

Ø 900 - Ø 1200				
Deflection	45%		50%	
Performance / Size (mm)	R (Ton)	E (Ton-M)	R (Ton)	E (Ton-M)
Ø 900 x Ø 450	39,27	7,66	48,29	9,61
Ø 1000 x Ø 500	43,67	9,46	53,68	11,88
Ø 1100 x Ø 550	48,07	11,44	59,07	14,37

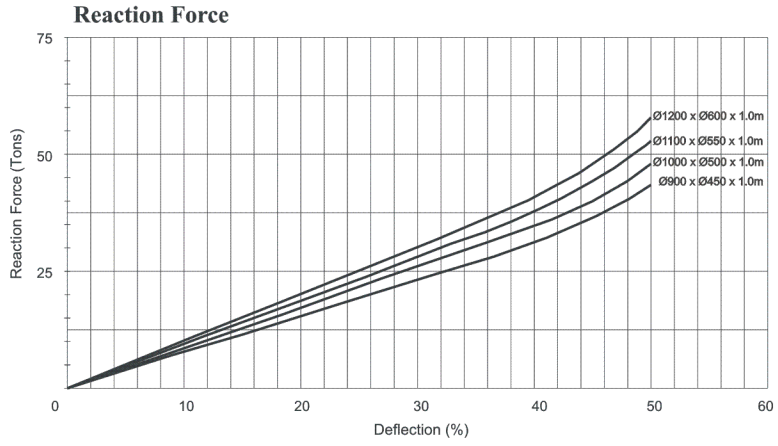

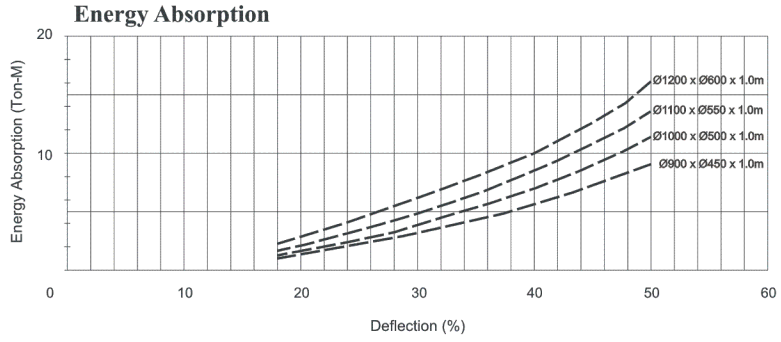

Cylindrical Fenders

Reaction Forced & Energy Absorption

RF=Reaction Force (Ton) E/A=Energy Absorption (Ton-m) Tolerance 10%

Ø 1300 - Ø 1600				
Deflection	45%		50%	
Performance / Size (mm)	R (Ton)	E (Ton-M)	R (Ton)	E (Ton-M)
Ø 1300 x Ø 650	56,76	15,98	69,85	20,08
Ø 1400 x Ø 700	61,16	18,54	75,13	23,28
Ø 1500 x Ø 750	65,56	21,29	80,52	26,73
Ø 1600 x Ø 800	69,85	24,21	85,91	30,40

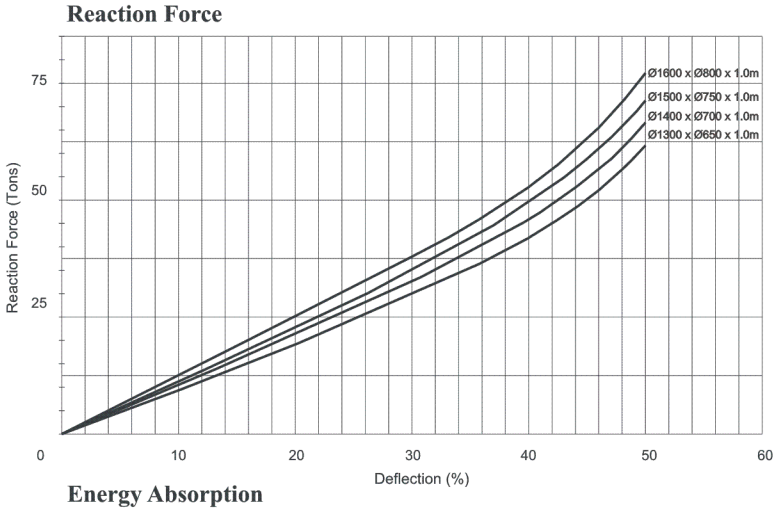

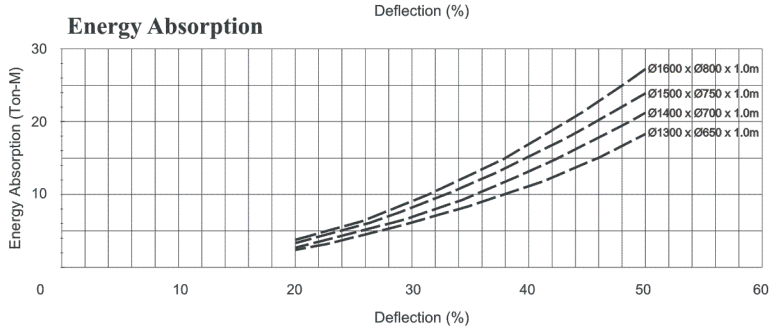

Cylindrical Fenders

Reaction Forced & Energy Absorption

RF=Reaction Force (Ton) E/A=Energy Absorption (Ton-m) Tolerance 10%

Ø 1700 - Ø 2000				
Deflection	45%		50%	
Performance / Size (mm)	R (Ton)	E (Ton-M)	R (Ton)	E (Ton-M)
Ø 1700 x Ø 850	74,25	27,34	91,30	34,33
Ø 1800 x Ø 900	78,65	30,65	96,69	38,49
Ø 1900 x Ø 950	82,94	34,14	101,97	42,88
Ø 2000 x Ø 1000	87,34	37,84	107,36	47,52

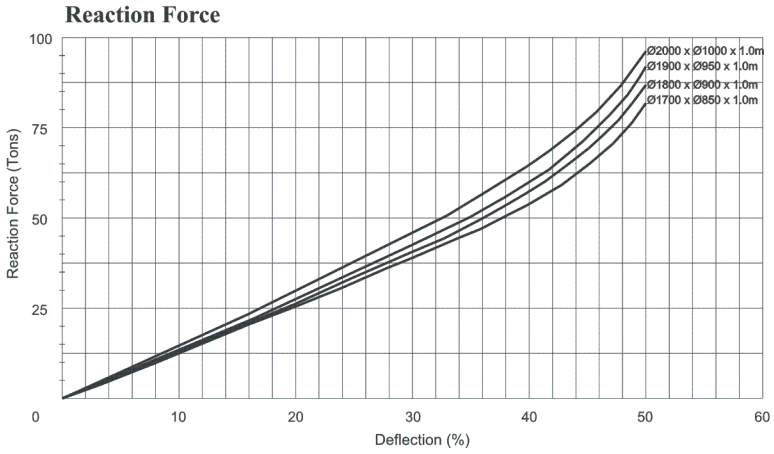

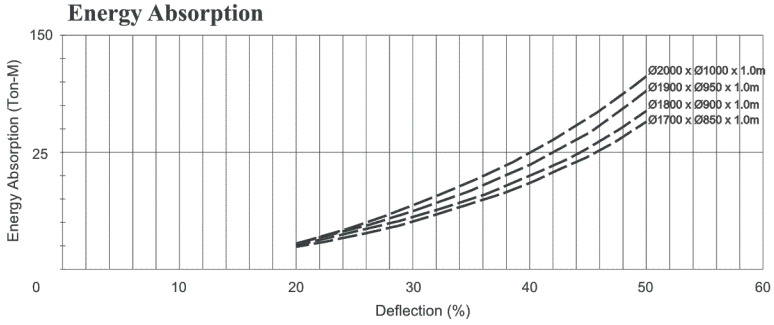

Rotary Fenders

Size & Performance

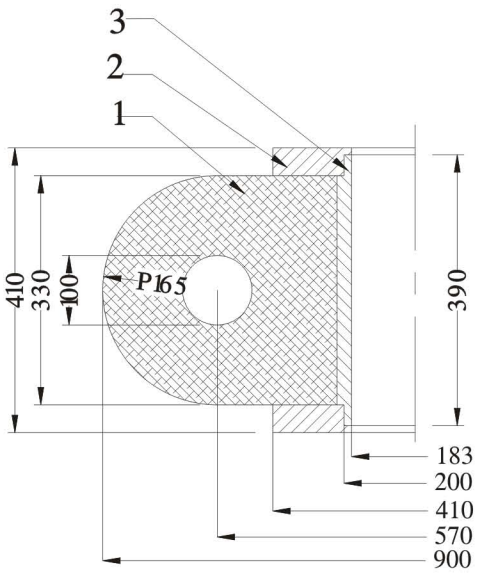

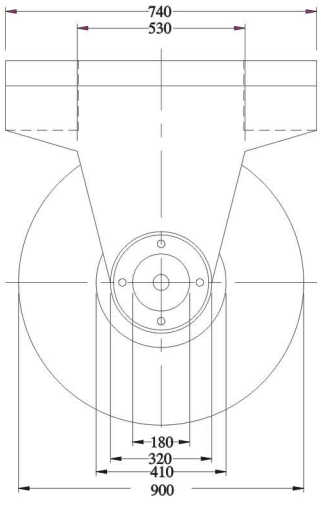

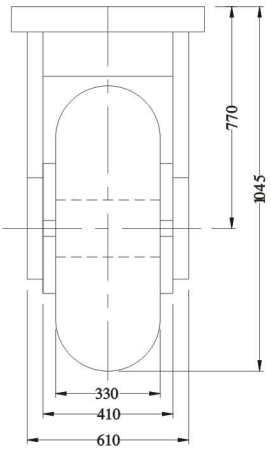

All dimensions in Milimetres

Pi Fenders

Size & Performance

TYPE P I 1000

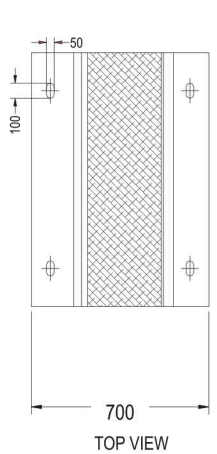

TOP VIEW

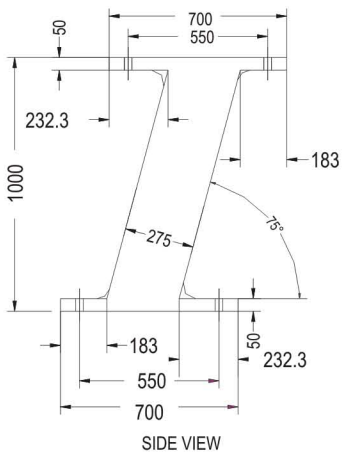

SIDE VIEW

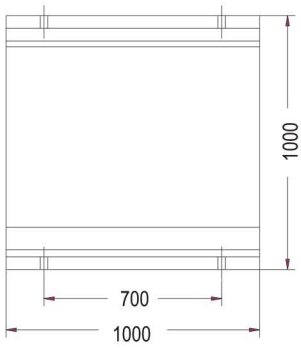

FRONT VIEW

All dimension in millimeters

Pi Fenders

Size & Performance
TYPE P I 1400

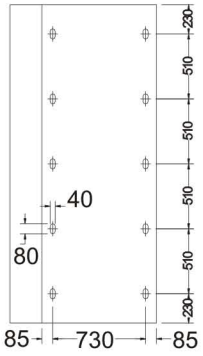

TOP VIEW

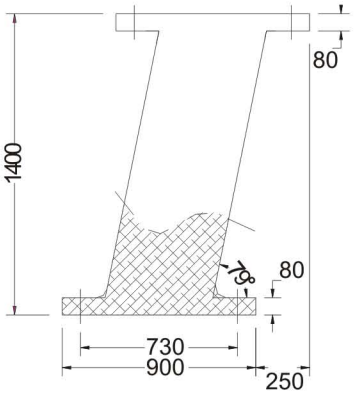

SIDE VIEW

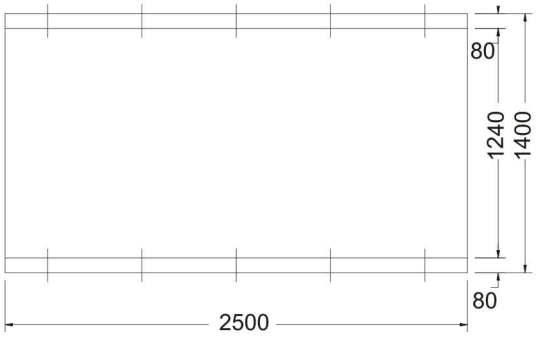

FRONT VIEW

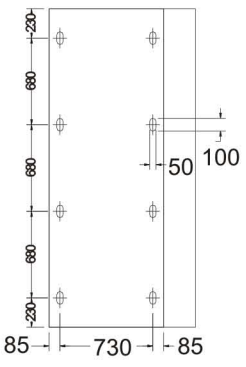

BOTTOM VIEW

All dimension in millimeters

Pneumatic Fenders

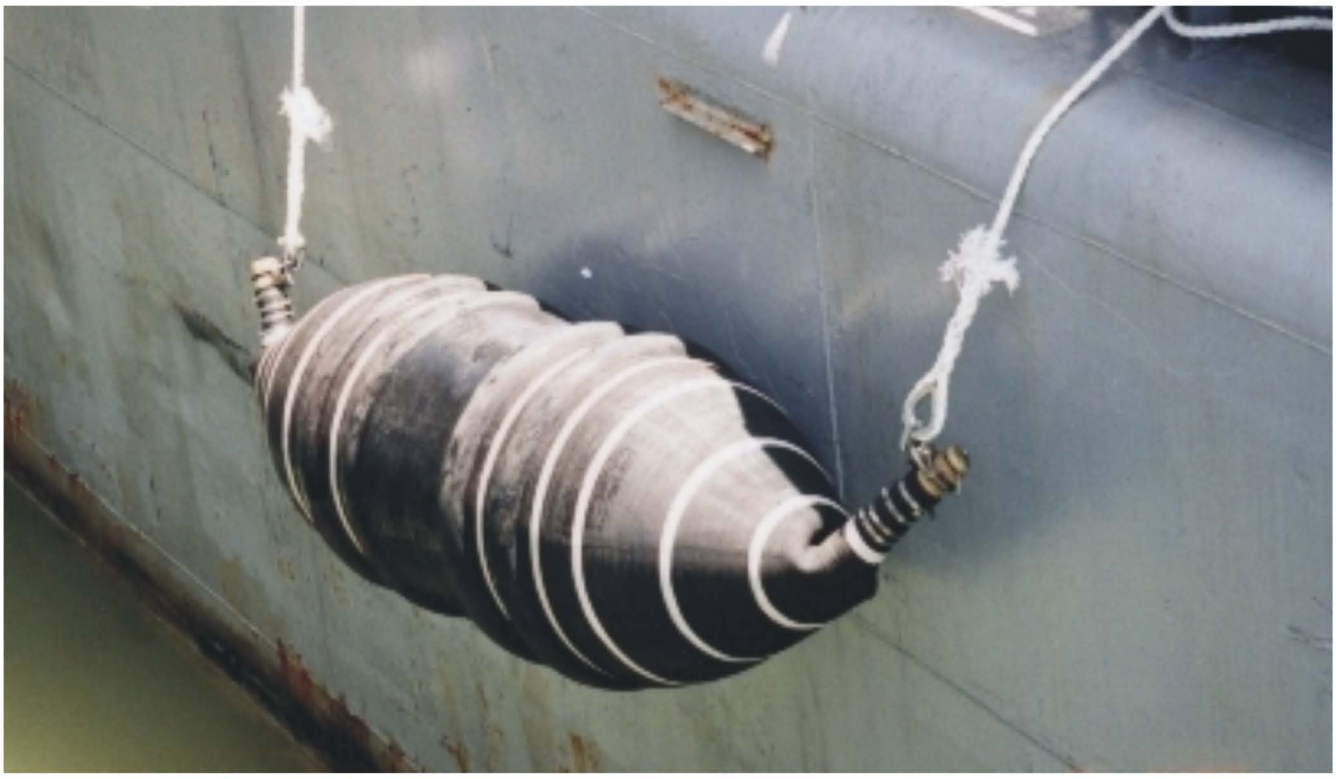

Size & Performance

Ø 1.230 x 1.450 x 3.400

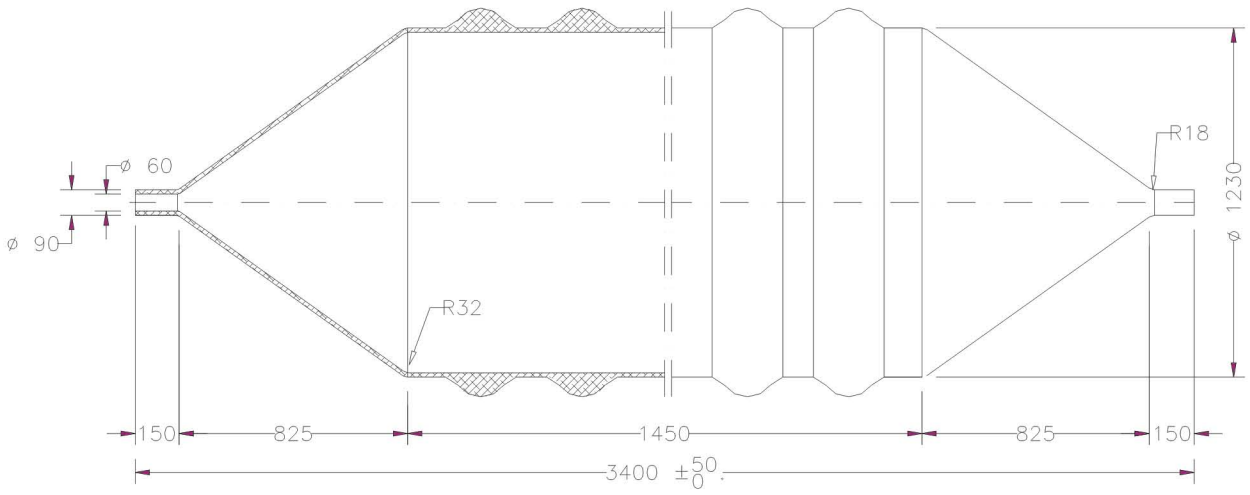

All dimension in millimeters

Pneumatic Fenders

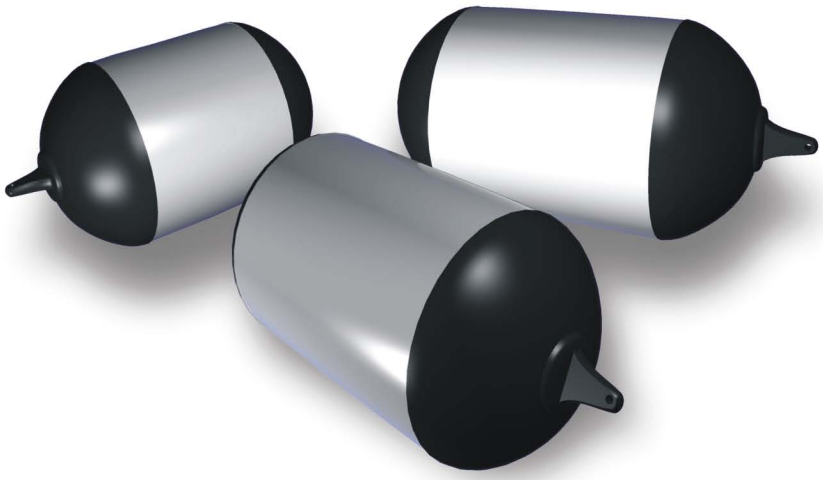

Size & Performance

Type F-11

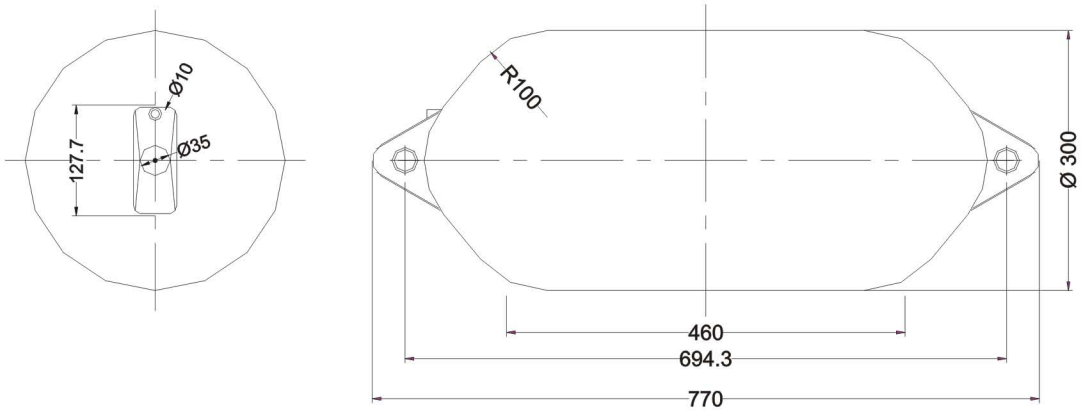

All dimension in millimeters

Type F-5

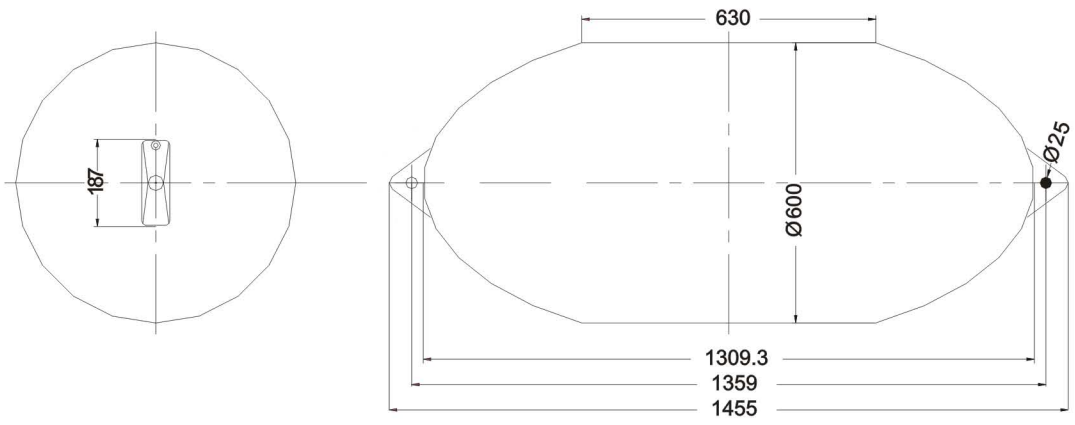

All dimension in millimeters

Pneumatic Fenders

Size & Performance

Ø 1500 x 2000

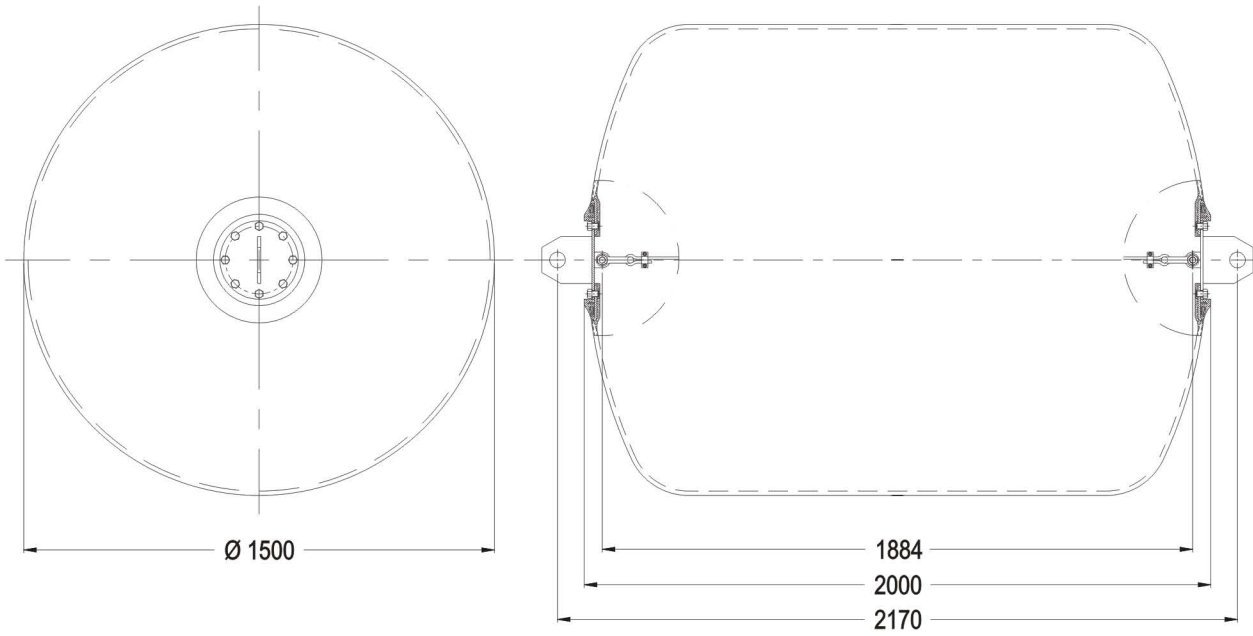

All dimension in millimeters